OWNERS MANUAL

"Ivan IRONMAN Stewart's
SUPER OFF-ROAD "TM
TABLE OF CONTENTS

SECTION		PAGE
A.	GENERAL GAME INFORMATION	
	1. Game Concept	1
	2. Assembly Instructions	2
	3. Warranty Information	4
	4. Maintenance and Upkeep Procedures	5
C.	THE TROUBLESHOOTISTS SECTION	
	1. A Note About Power	6
	2. Our Service Department	6
	3. Troubleshooting Flow Chart	7
	4. General Shooting	8
	5. Monitor Shooting	8
	6. Buffers	8
	7. About Mechanical Coin Counters	9
D.	ILLUSTRATED PARTS LIST	
	1. Cabinet	10
	2. Controls (buttons, foot pedals, steering wheels, etc.)	11
E.	WIRING DIAGRAMS	
	1. Main Board	12
	2. Multi-Function Board	14
	3. Cabinet	16
F.	BOOKKEEPING AND DIAGNOSTICS SECTION	
	1. Main Menu - Bookkeeping - Diagnostics Menu	17
	2. Video Alignment Screens	21
	3. Game Set-Up - Game Statistics	23
E.	SCHEMATICS & BOARD LAYOUTS	
	1. Multi-Function Board Layout (top board)	27
	3. Multi-Function Board Schematics	28
	4. Main Board Layout (bottom board)	38
	5. Main Board Schematics	39
	6. 25" Wells Gardner Monitor	58

"Ivan IRONMAN Stewart's *SUPER OFF ROAD*"™ GAME CONCEPT

In his never ending quest for adventure and excitement, man invented off-road racing. These races were then brought before the masses by converting huge sports stadiums into dirt and mud obstacle courses in which off-road "Ironmen" battled for top honors.

Now **THE LELAND CORPORATION** brings this fast moving, hard driving sport to the video game arena.

"Ivan IRONMAN Stewart's *SUPER OFF-ROAD*"™ is stadium off-road racing at it's best. One to three players are asked to test their dirt track skills against the best dirt truck driver in the world.

Contestants compete on 8 different tracks with a total of 16 configurations and these courses are packed with enough jumps, bumps, hills, and holes to challenge even the most skillful driver.

Winning drivers earn "cash" prizes, and use this "cash" to "buff out" their machines. At the end of each race, players take their trucks to the "Speed Shop" to buy better shocks, tires, engines, and higher top speed. They can also buy nitro packs to help them blast over the jumps and through the mud.

The **"Convert-a-Credit"™** feature allows drivers to add to their winnings by using credits as "cash". Each additional quarter, when converted, becomes $200,000.00 in game "cash" and this additional "cash" may be used for purchases in the "Speed Shop".

Team Leland's **"Ivan IRONMAN Stewart's *SUPER OFF-ROAD*"™** has the depth and variety to be an income 'winner' for years to come.

"Ivan IRONMAN Stewart's
SUPER OFF-ROAD"™
CABINET ASSEMBLY ILLUSTRATION

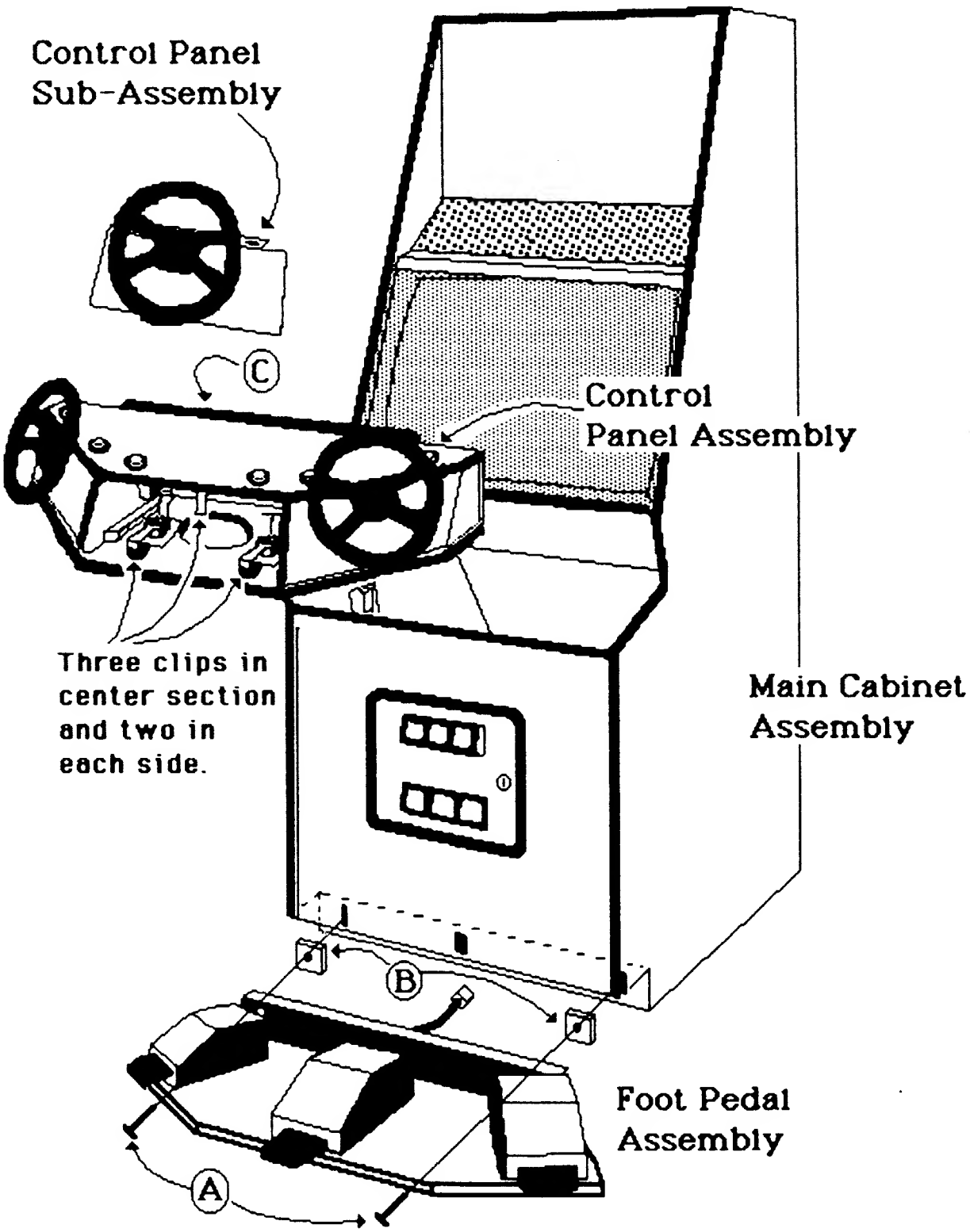

ASSEMBLY INSTRUCTIONS

1. Remove all parts from shipping containers and check them for damage. Notify your distributor (and the shipper) **immediately** if you find any broken parts.
2. Detach and remove the pedal assembly from the inside of the main cabinet. Remove the two bolts **(A)** and blocks **(B)** from the bottom front of the main cabinet.
3. At this point, it is a good idea to lift the monitor plex and clean or dust from the monitor any debris which may have settled in shipment.
4. Remove the center (yellow) steering section from the control panel assembly by reaching through the hole in the bottom of the assembly and unfastening the three clips inside. Attach the monitor plex retainer **(C)** to the control panel assembly. (The wing nut should be loose until the control panel assembly has been attached to the game cabinet.)
5. Position the control panel with the harness connectors hanging into the main cabinet and secure the panel to the main cabinet by reaching through the front door and attaching the four clips provided.
6. Connect the control panel harness to the main harness, tighten the wing nut on the monitor plex retainer and reinstall the center steering section.
7. Feed the pedal harness through the center hole in the lower part of the cabinet and attach the pedal assembly using the bolts **(A)** and blocks **(B)** removed in step 2. ***REMOVE THE PEDAL ASSY. WHEN TRANSPORTING THE GAME.***
8. Check through the cabinet for loose wires. Plug the game in and power-up. Check for smoke.
9. Go through <u>all</u> diagnostics and game set-up procedures and ***PLAY THE GAME.*** If it works - don't fix it, just get it out there and

Do it in the dirt!

Please call our Customer Service Department with any questions or comments.

THE TROUBLESHOOTIST'S SECTION

A NOTE ABOUT POWER

DC POWER

The computer board in this machine operates most efficiently when the power supply is providing a steady + 5.20VDC (+0.1VDC). When checking DC power always put your leads across the power inputs on the main board and be sure that the +5 volt supply is between +5.20VDC and +5.24VDC. Also be sure that there is less than .005 volts AC riding on the +5 volt line. If you do find AC on the DC line, suspect the filter capacitor or the rectifier on the power supply. Low voltage and AC on the DC lines are the main causes of the following problems:

* "Garbage" on the screen.
* Computer "Freeze".
* Coin or Coin Meter malfunction.
* A variety of seemingly unrelated problems.

AC POWER

Connect this game only to a grounded three-wire outlet which provides between 108 and 132 volts AC. If you have only a two-wire outlet we recommend that you hire a licensed electrician to install a grounded outlet. The possibility exists that players may receive an electrical shock if this system is not properly grounded.

OUR SERVICE DEPARTMENT

For parts, service, and technical information first contact your authorized Leland Corporation distributor. For additional technical aid feel free to contact the Leland Corp. Customer Service Department at ***(619)562-7000*** Monday through Friday from **8:00 AM to 5:00 PM Pacific Standard Time.**

To provide you with the quickest possible response to your questions, please have the following information ready when you call:

1. **Your game name and serial number.**

2. **Any reference materials and a list of observations.**

TROUBLESHOOTING FLOW CHART

DON'T TOUCH THAT SWITCH !!!

Before you reach for the power switch take a good look at the game. Open it up and check for loose wires, bad connections, or burned spots. Look for spilled drinks and signs of vandalism. Those quick checks will save you a lot of time.

After you've eliminated the obvious, start digging.

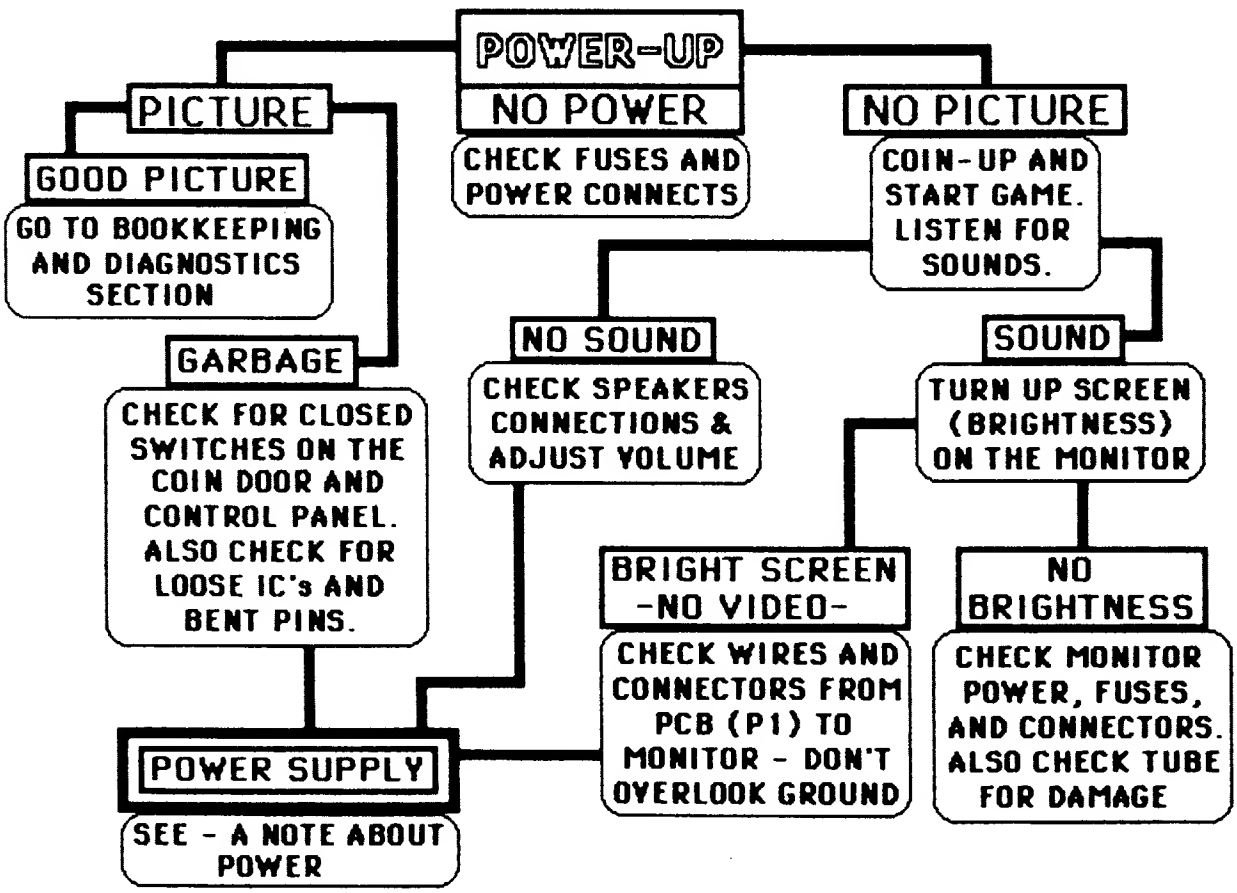

Never take anything for granted. This is easy to do if you are in a hurry --- You'll kick yourself every time for missing a broken wire or loose connector after spending hours looking in the wrong place - I have.

GENERAL SHOOTING

GARBAGE
Check: Power supply voltages.
Closed switches on the control panel or coin door.
Loose connections, loose IC's, or bent pins on the board.

NO SOUND
Check: Loose connections.
Low +12VDC supply.
Bad speaker or volume pot.

NO CONTROL OR FUNCTION SWITCHES (Includes coin switches)
Check: All Connections. (Especially ground)
Wire continuity between board and switch.
Closed or broken switches.
Input buffers. (See BUFFERS.)

MONITOR SHOOTING

NO PICTURE
Check: Power connection.
Monitor fuses.
Video connections. (Check continuity.)

SYNC PROBLEMS
Check: Sync and ground connections. (See WIRING DIAGRAM)
Sync polarity.
Video output buffer.

BUFFERS

An input or output (I/O) buffer is the component that connects the actual game computer to the outside world and, as such, is the part most likely to fail. Check the following list when attempting to isolate possible problems. First and second choices are given. (M=Main Board, I/O= Multi-Function Board.)

NOTE: ANY UNAUTHORIZED BOARD REPAIR OR ATTEMPTED REPAIR WILL VOID YOUR WARRANTY.

PROBLEM AREA	COMPONENT	PCB LOCATION
VIDEO (Colors or Sync)	1st 7405 or 74S05	M-U24
	2nd 74LS374	M-U37
PLAYER CONTROLS and/or COIN CONTROLS	1st 150 ohm resistor pack.	See Wiring Diagram & Schematics for specific switch.
	2nd 74LS257	
AUDIO (Bad channel)	1st 7524	I/O-U35(ch5) through U40 (ch0)
	2nd 7533	I/O-U31

ABOUT MECHANICAL COIN COUNTERS

We have <u>not</u> installed mechanical coin counters on this game for two reasons:

1. The bookkeeping program is extremely accurate and includes not only number of coins dropped and dollars earned but also the number of tests and coins in a given period. (See BOOKKEEPING in the DIAGNOSTICS section.)
2. These mechanical coin counters produce an inductive "kick" that ***will*** damage components on the circuit board.

Checkerboard video is the most common problem. If this is, in fact, your problem - take a look at the "NMI not" signal on the master Z80 (pin 17). If a low output is observed, try replacing U114 (74LS08) and/or U119 (74LS157).

NOTE: If you must install a mechanical coin counter, please use the following diagram. (Diodes may be 1N4001 to 1N4004.)

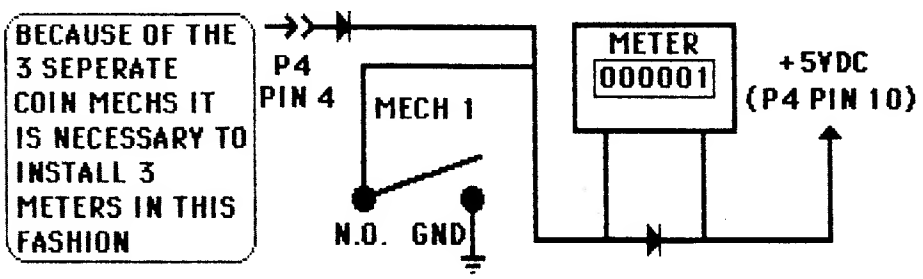

"Ivan IRONMAN Stewart's *SUPER OFF-ROAD*"™
ILLUSTRATED PARTS LIST

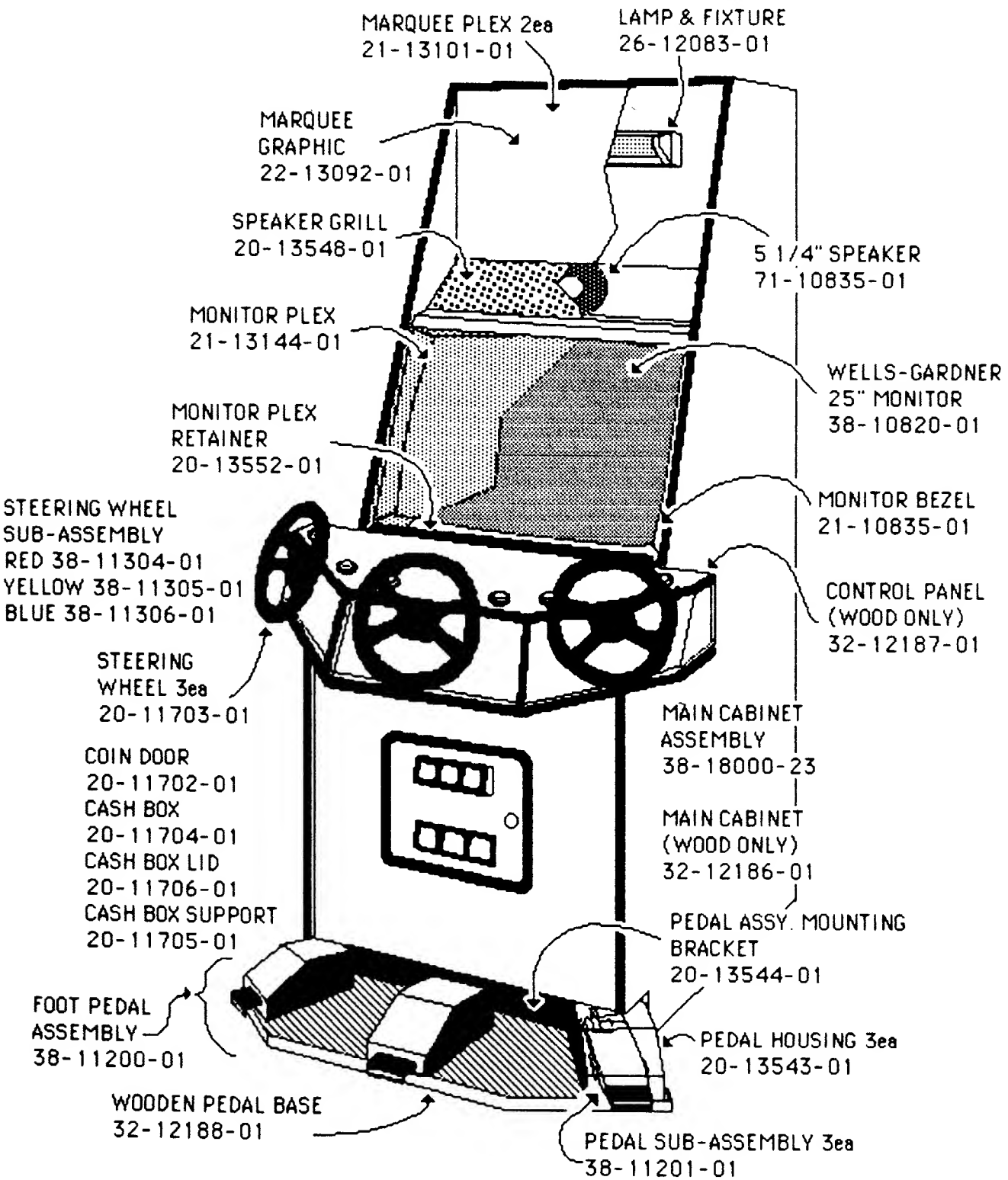

OTHER PARTS

CONTROL PANEL

PANEL TOP OVERLAY 22-14924-01
SUB-PANEL OVERLAYS
RED - 22-14921-01
YELLOW - 22-14922-01
BLUE - 22-14923-01

BUTTON - MICRO 2ea
RED - 37-11194-01
YELLOW - 37-11196-01
BLUE - 37-11195-01

LATCH 11ea - 20-10867-01
(7 inner panel and 4 cabinet)

STEERING ASSEMBLY

METAL PANELS
RED 20-13549-01
YELLOW 20-13550-01
BLUE 20-11551-01

ENCODER WHEEL
25-11007-01
LARGE GEAR 25-11008-01
SMALL GEAR 25-11009-01

MISCELLANEOUS

ON/OFF SWITCH - 37-10894-01
VOLUME POT - 51-12501-01
LEG LEVELER - 20-13530-01

PEDAL ASSEMBLY

SHOULDER BOLT
4"X1/2" STAINLESS
25-18251-01
POTENTIOMETER
51-12502-01
ARMATURE
20-13540-01
SPRING - 20-15061-01

ELECTRONICS

PCB ASSEMBLY COMPLETE
38-11695-22
MAIN (BOTTOM) PCB
81-12170-14
MULTI FUNCTION #2 (TOP) PCB
81-18002-22

STEERING OPTO COUPLER PCB
80-20000-01

POWER SUPPLY

ISOLATION TRANSFORMER
43-11704-01
SWITCHING POWER SUPPLY
82-12150-01
LINE FILTER - 63-12131-01
POWER CORD - 87-12143-01

MAIN WIRING DIAGRAM (MAIN BOARD)

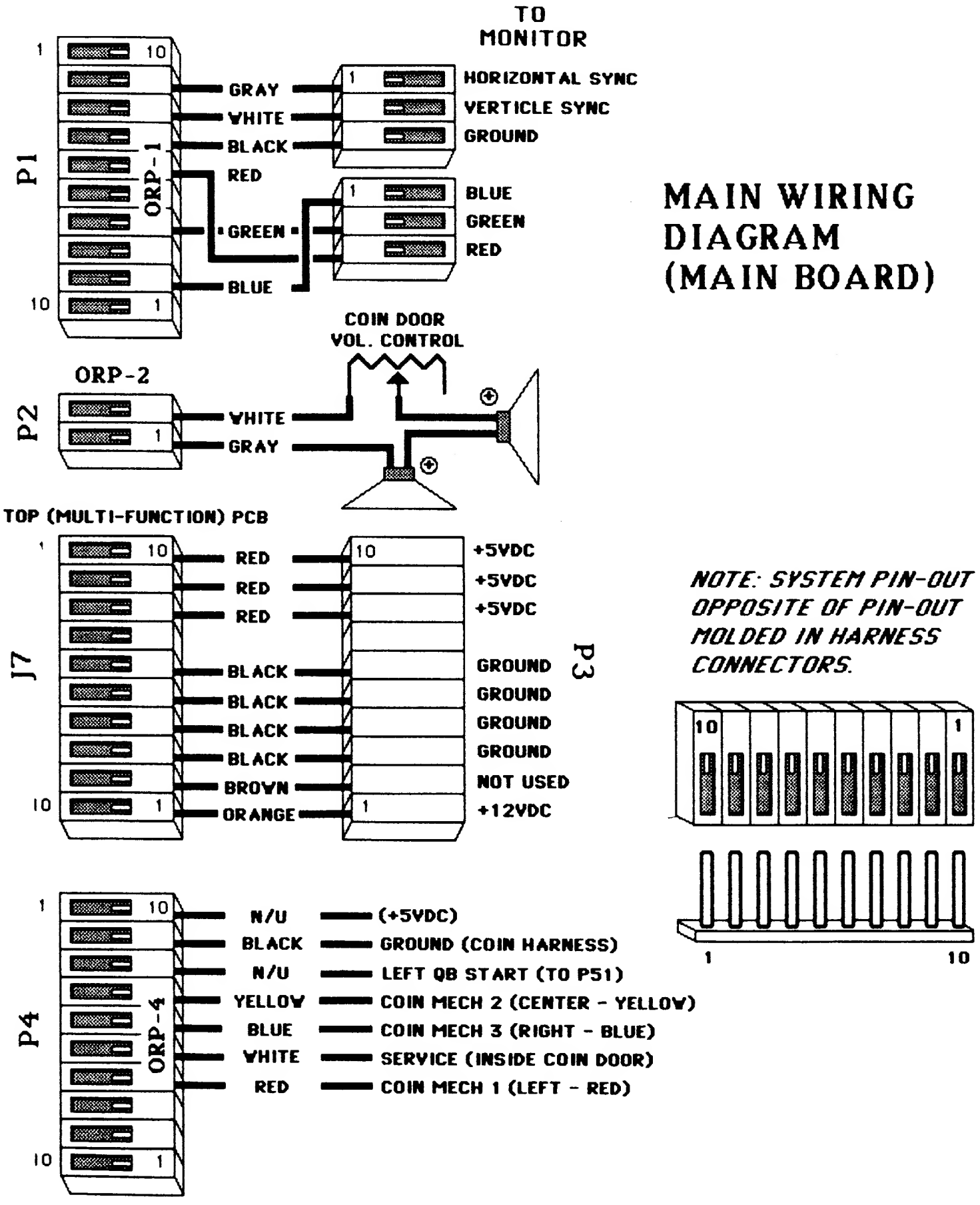

NOTE: SYSTEM PIN-OUT OPPOSITE OF PIN-OUT MOLDED IN HARNESS CONNECTORS.

CP-5 SP-5

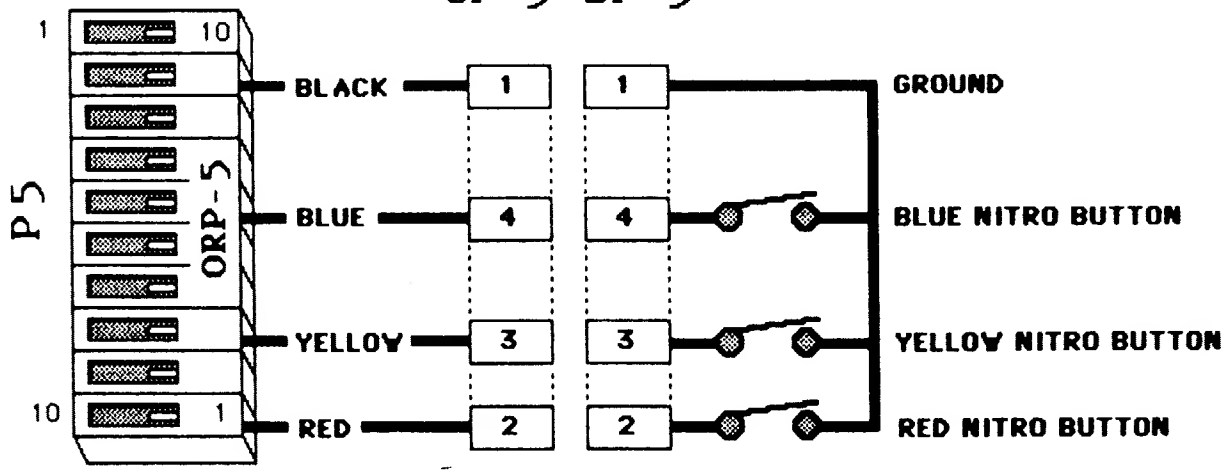

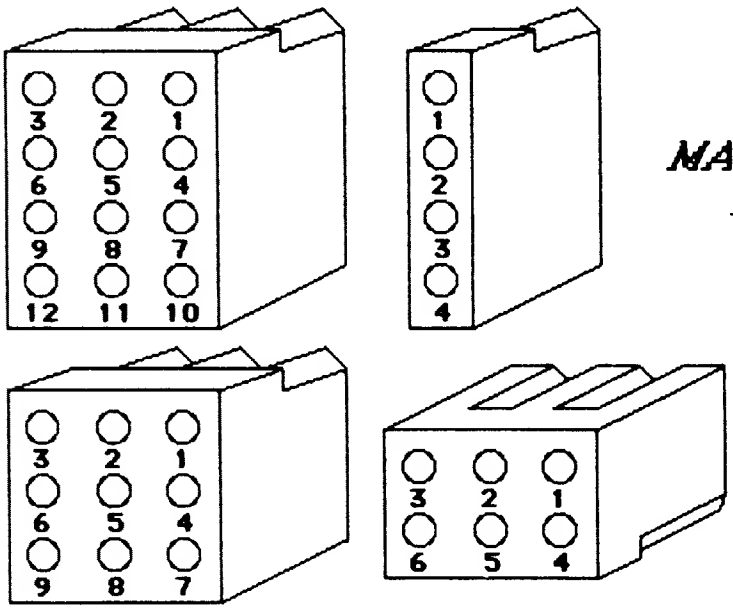

MALE MOLEX CONNECTORS
TYPICAL PIN-OUT

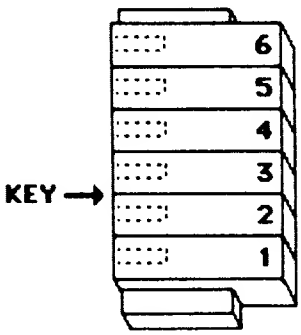

STEERING WHEEL
CONNECTOR

SEE MAIN BOARD LAYOUT
FOR BOARD CONNECTOR
LOCATIONS.

MAIN WIRING DIAGRAM (MULTI-FUNCTION BOARD)

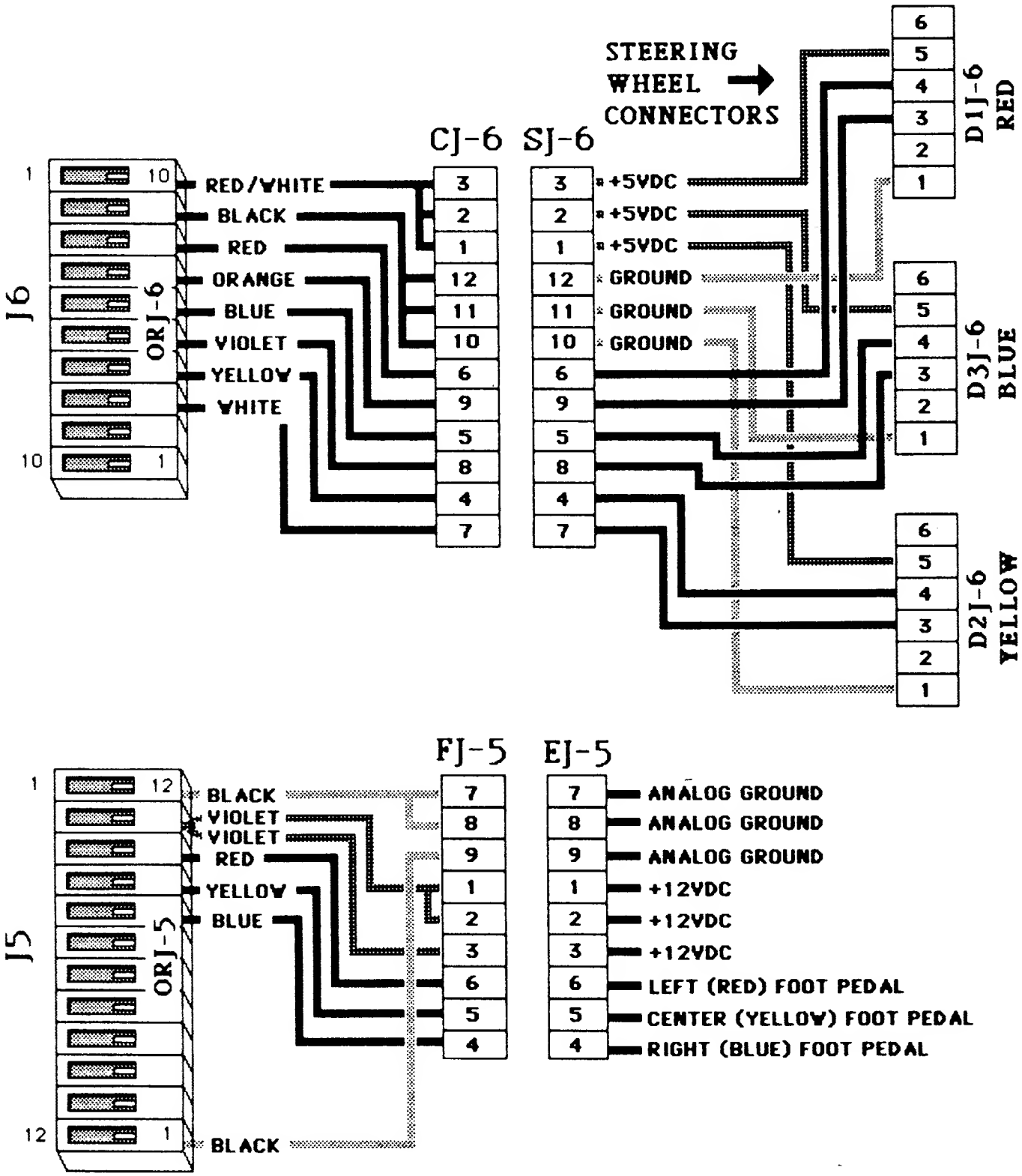

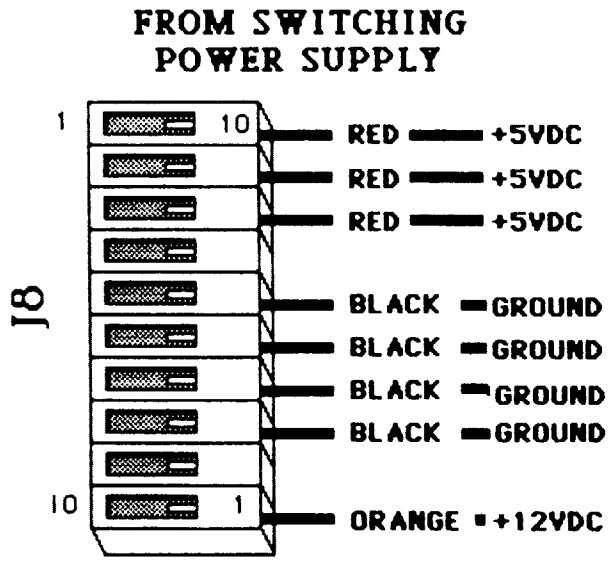

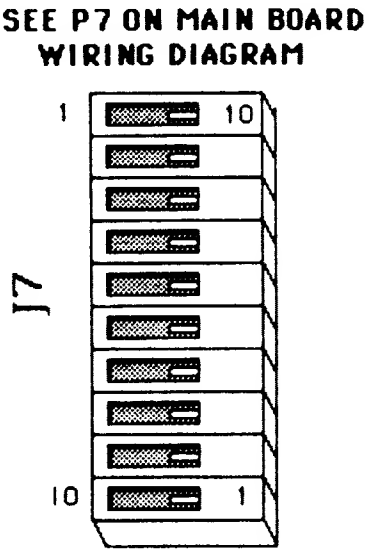

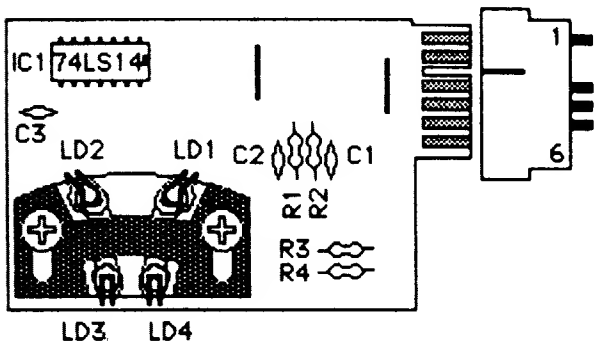

STEERING OPTO-COUPLER PCB CONNECTION

FOOT PEDAL POTENTIOMETER HOOK-UP

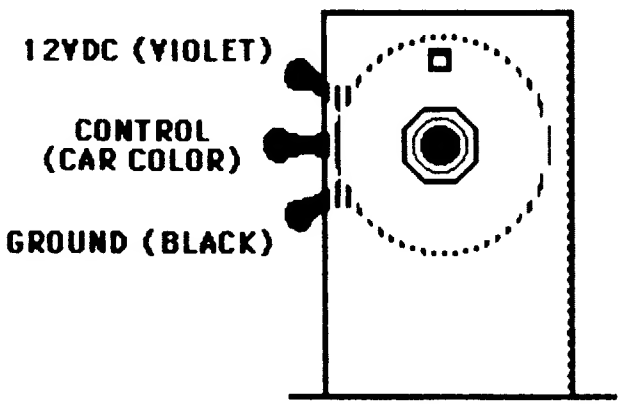

CABINET WIRING DIAGRAM

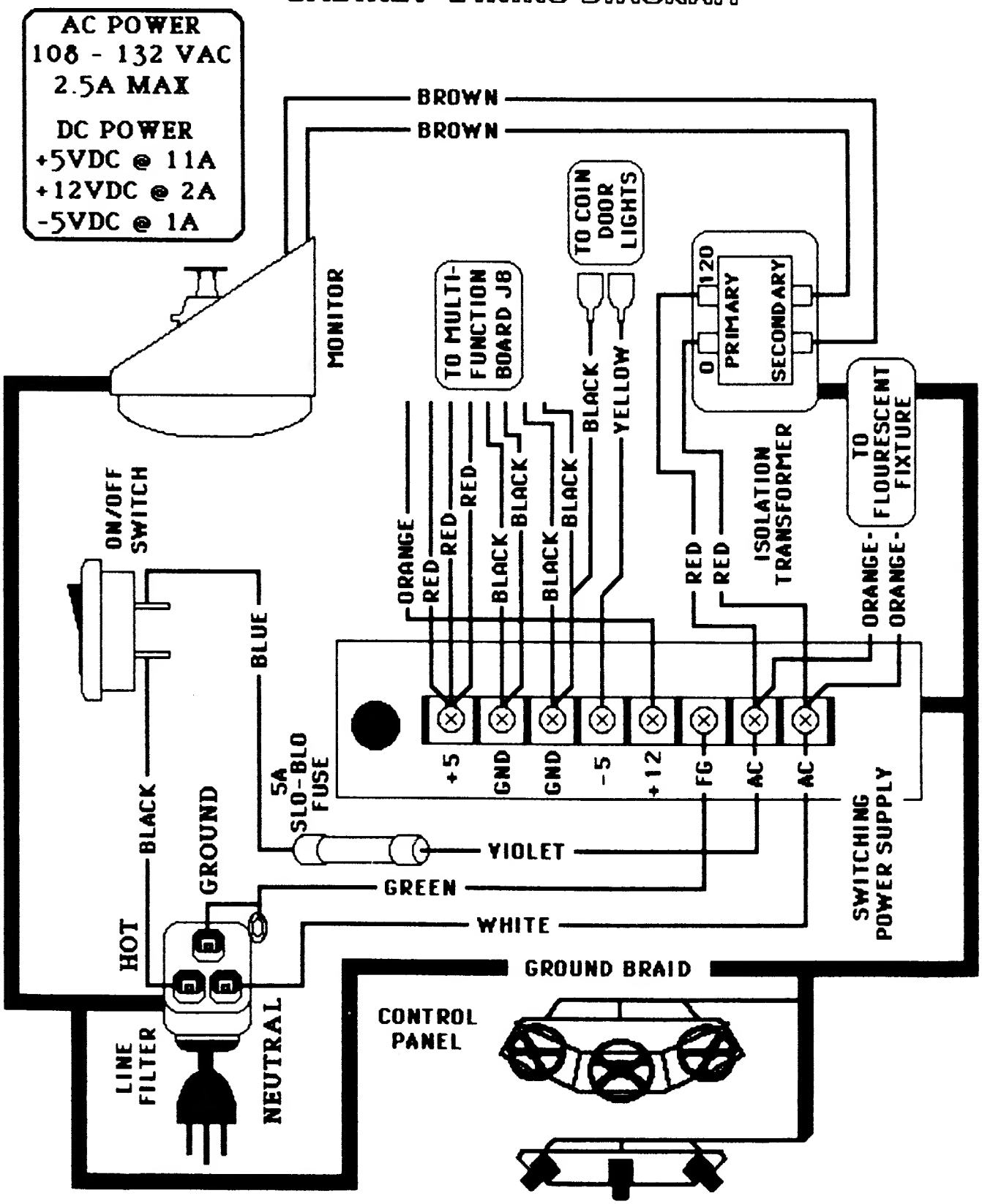

BOOKKEEPING AND DIAGNOSTICS SECTION

To enter the Bookkeeping and Diagnostics Section:

* With the **Blue Nitro** button depressed, press the **Test** button located inside the front door on the left.

Upon entering the program, the **Main Menu** will appear (Figure 1). Follow the instructions on this menu to select and enter the desired function.

Bookkeeping (Figure 2)

The Bookkeeping function is your game accountant. It records the life-time earnings of your game and allows you, through the use of resettable "Period" totals to keep track of weekly, monthly, or location earnings. This function also separates the readings by coin mech. If one of the coin mech readings is disproportionately low, you may suspect that your players are having trouble with either that mech or the controls of the car associated with that mech.

NOTE: The **"SET COINS/TOKENS PER DOLLAR"** category must be set to the location standard to maintain accurate accounting data. (i.e. 6 COINS/TOKENS PER DOLLAR.)

THIS FUNCTION DOES NOT AFFECT THE NUMBER OF COINS PER CREDIT - SEE THE "GAME SET-UP" SECTION FOR COINS PER CREDIT INFORMATION.

Diagnostics (Figure 3)

You will notice the Diagnostics Section has a sub-menu of its own. Invoking the Diagnostics function will open a complete and easy to use set of tests designed to take the grumbling and hair pulling out of adjusting, troubleshooting, and servicing your machine.

Buttons and Controls Test (Figure 4)

This test provides a quick examination of the state of all buttons and controls as well as an easy range and direction setting format for the steering and pedal controls. As shown on the screen, the **minimum** setting for any foot pedal assembly is between **0 and 80**. Each pedal must also be able to achieve the **maximum** setting of **255** when fully depressed.

Processor Memory Test (Figure 5)

The Erasable Programmable Read Only Memory (EPROM) and Random Access Memory (RAM) IC's are storage areas for the actual game guidelines and are accessed by the Microprocessor section.

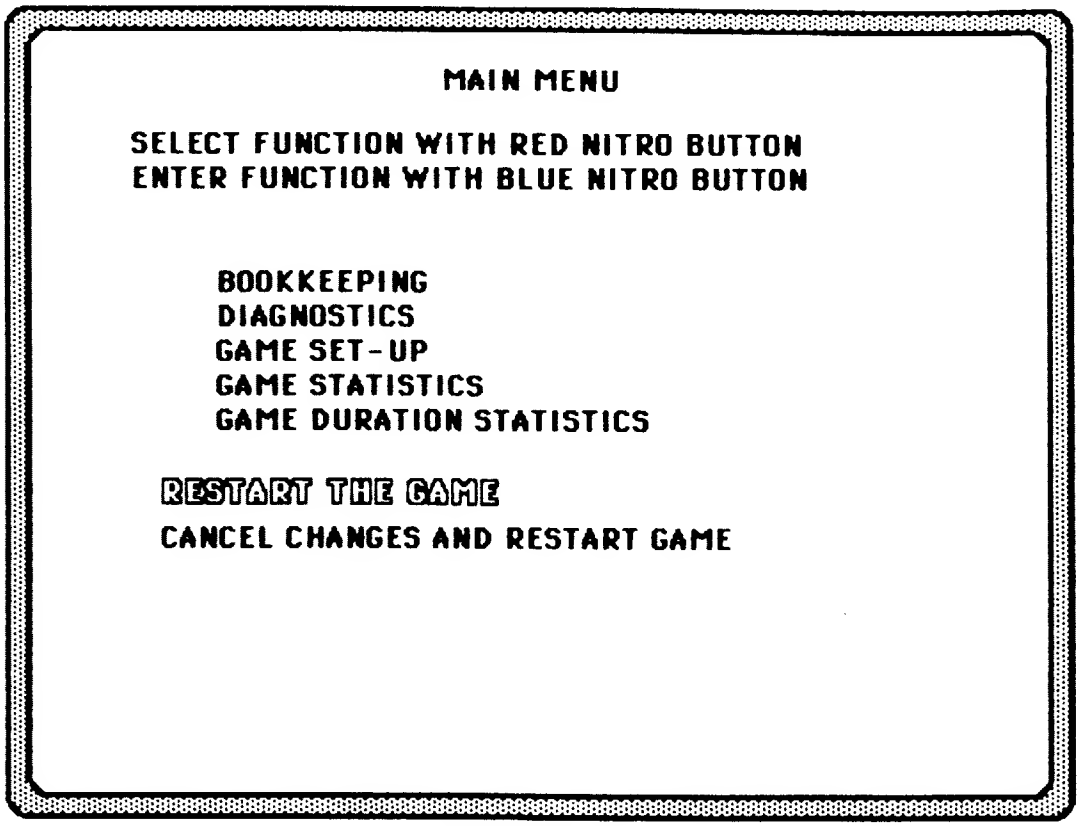

FIGURE 1

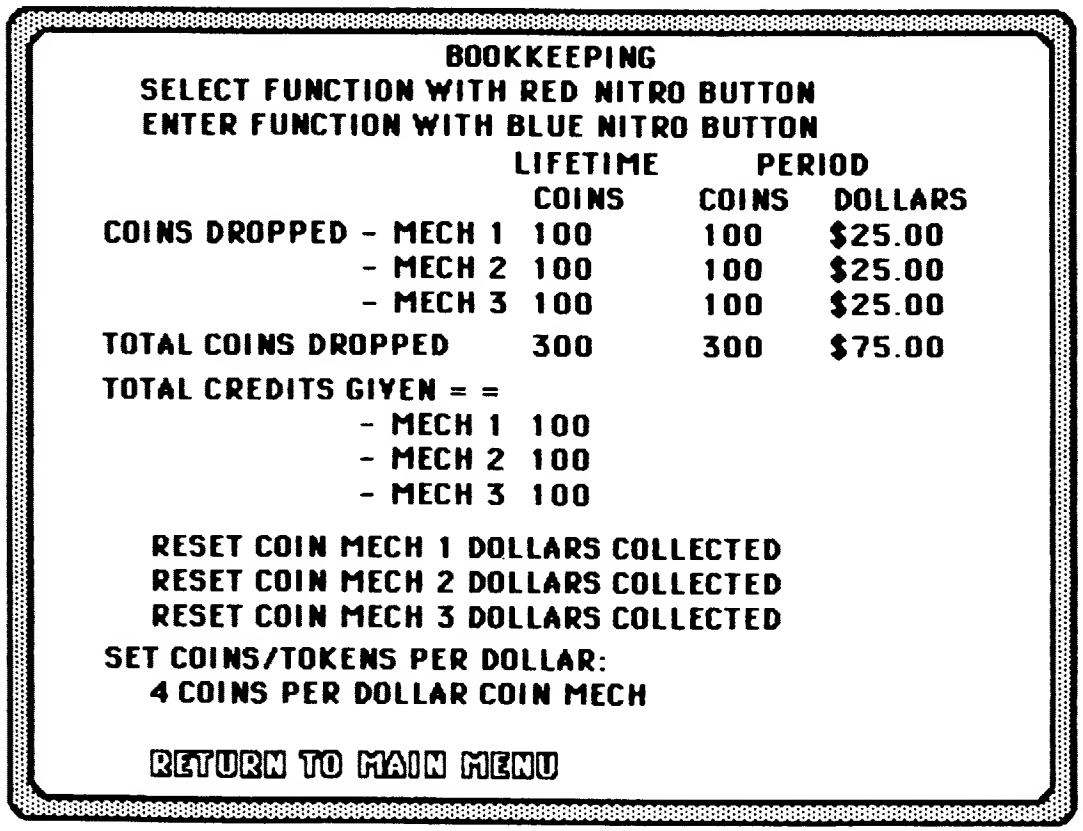

FIGURE 2

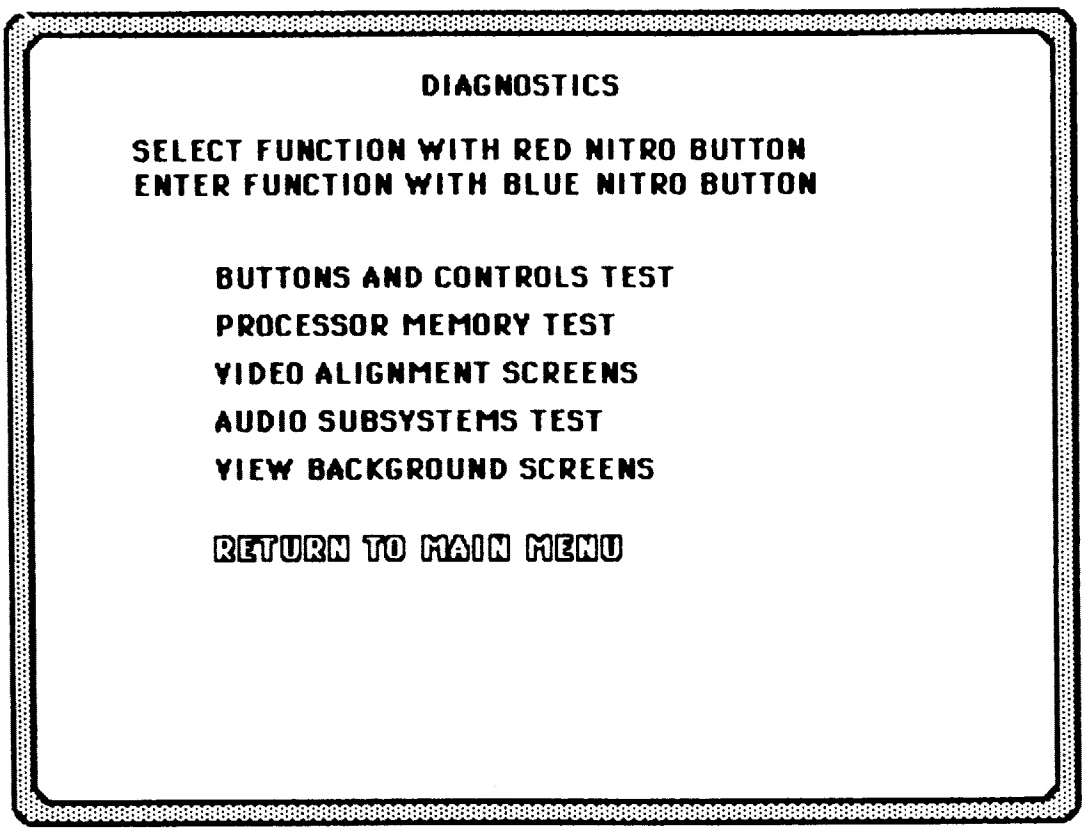

FIGURE 3

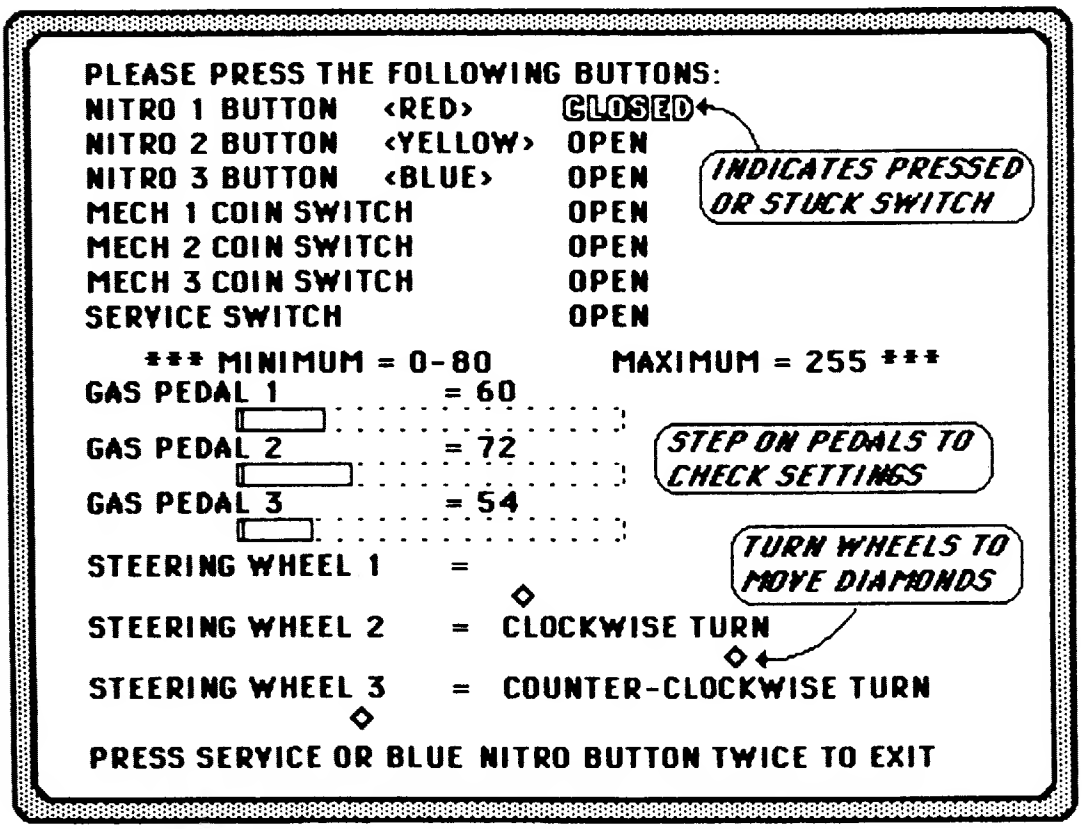

FIGURE 4

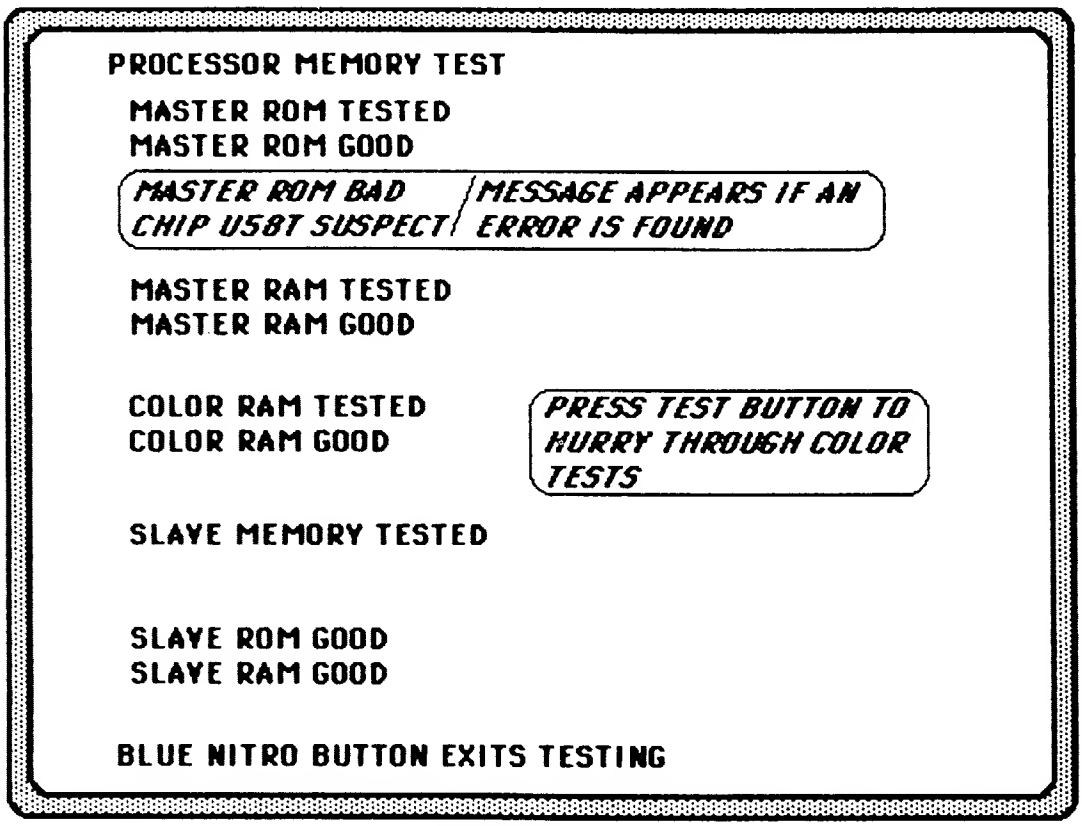

FIGURE 5

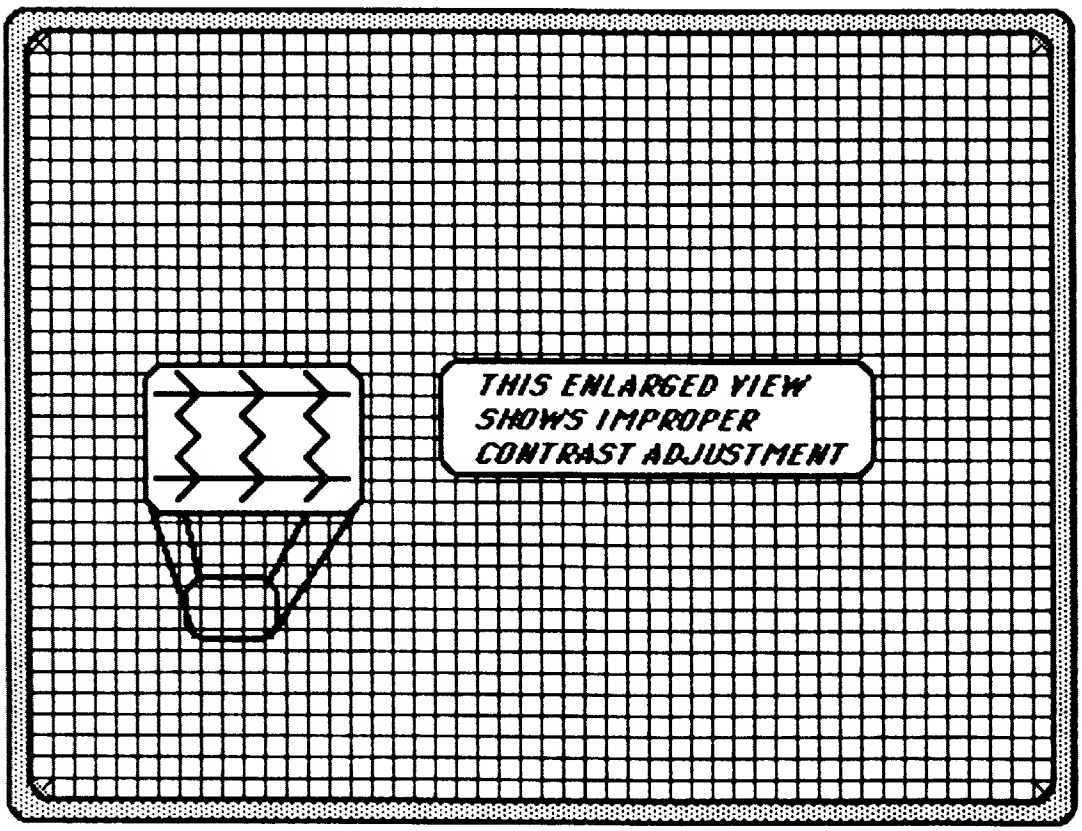

FIGURE 6

Processor Memory Test (cont.)

The percentage of field failures in these areas is very low, but when a problem does arise, it can be a bear to track down. This test samples the action of the processor section and notes any incongruities.

WARNING: **READ YOUR WARRANTY BEFORE ATTEMPTING *ANY* PRINTED CIRCUIT BOARD REPAIRS.**

Video Alignment Screens

The picture on the screen is the most important and most neglected part of the game. It is a proven fact that a dirty, misaligned, or unfocused screen will cause a player to walk away even if the game is his/her favorite piece. A little elbow grease and a couple of minutes spent going through these adjustment screens will make a big difference in the cashbox. Use all three screens to adjust your picture and then go to the "Background Screens" section to make the game look ***"rich"***.

Cross-Hatch Screen (Figure 6)

Used to adjust focus, alignment, size (note x's in the corners) and contrast. Wavy vertical lines (see inset) denote bad contrast. The background should be black and the lines solid white.
If there appears to be an area of color on the screen (usually in one of the corners), your monitor probably needs "degaussing". This condition is caused by moving the game with the power on. Although the monitor contains an internal degaussing mechanism, this mechanism might take a while to work and may not completely cure the problem. I recommend that you purchase a "degaussing coil" and carry it in your service vehicle. Degaussing doesn't take much time and it makes a big difference.

Red and Green Screen (Figure 7)

Adjust the screen or brightness control so the green color bar shows **faintly** on the **1** level and use the red cutoff control to adjust the red bar to the same intensity.

Blue and Miscellaneous Screen (Figure 8)

Use the blue cutoff control to make the gray color appear gray (not brownish). Adjust the red and green drive controls slightly, if necessary, to make the white block white.

Audio Subsystems Test (Figure 9)

The sounds are the second most important feature of any game and in a game like "Super Off-Road" are essential to the feel of the game. The volume of sound is, for the most part, dictated by the location and is thus a "given" but the quality of sound is a function of the program. This test will be of help in your quest to find those "odd" sounds or to remedy the lack of certain sounds.

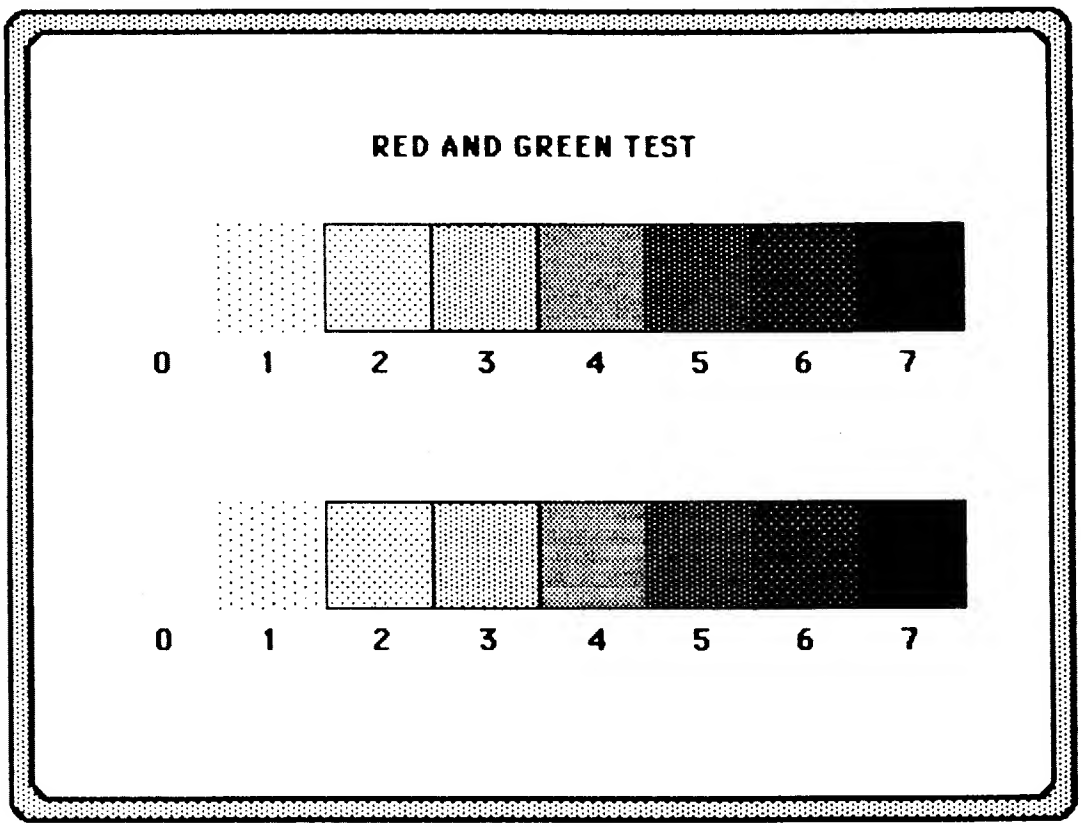

FIGURE 7

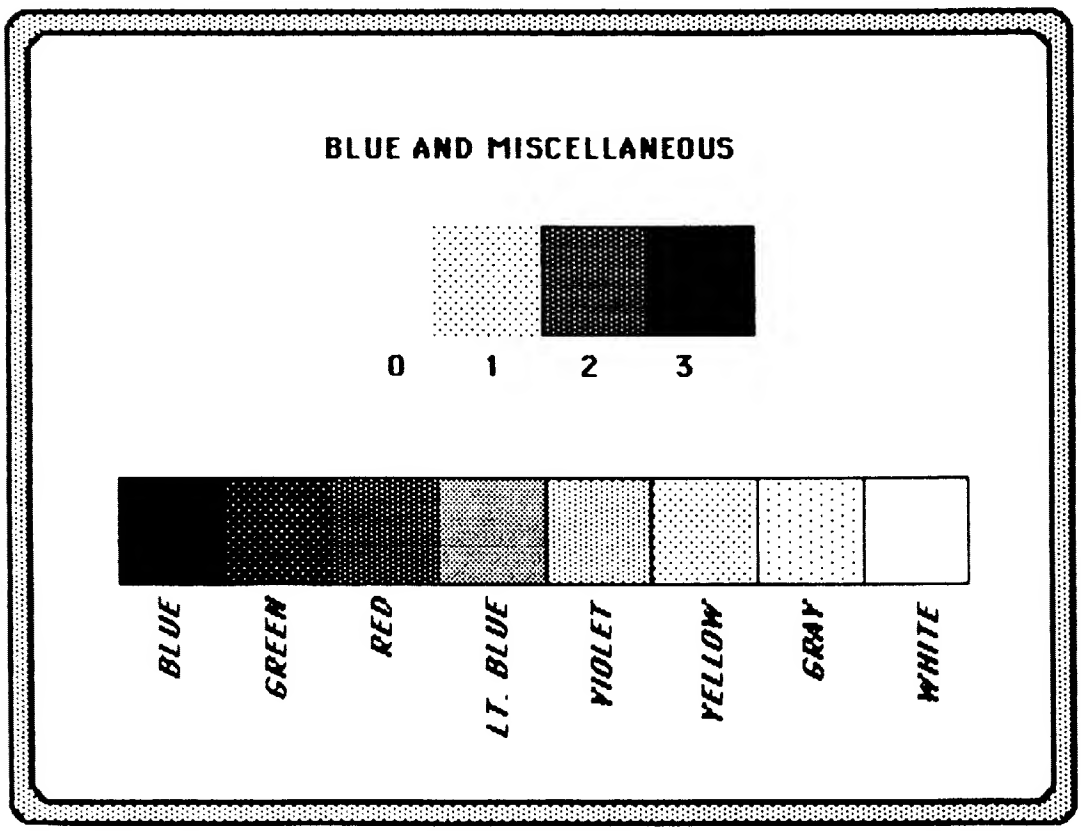

FIGURE 8

Background Screens (Figure 10)

In this test, the background screens are shown while the EPROMs which contain the information for these screens are displayed at the top of the picture. This test is not only helpful when looking for those "glitches" one sometimes encounters, but may also be viewed as a visual test of the colors and picture clarity after the "Video Alignment" test has been completed.

Game Set-Up (Figure 11)

The "Game Set-Up" or "Operator Adjustable" section is vital to the condition of your cash box. When used in conjunction with the "Bookkeeping" and "Statistics" sections of this diagnostics package, the "Game Set-Up" function will keep this game on your list of top earners for years to come.

The **Coins-per-Credit** settings range from 1 coin for 1 credit to 20 coins for 20 credits. *(0 coins for 1 credit sets the game on "free play".)*

SOME SOUND ADVICE:

THOSE ANNOYING ATTRACT MODE SOUNDS ARE SUPPOSED TO DRAW ATTENTION.

LET THEM !

The **Difficulty** level may be set from 1 to 8. Our tests show that level **4** is the best all-around starting point.

After entering their initials and birth date each player is asked to choose the country for which he/she will race. The operator may select one of the countries listed to better suit his game to a particular location.

Game Statistics (Figure 12) **& Game Duration Statistics** (Figure 13)

These two sections are your game "Report Card". Check these sections for glaring discrepancies. Many "starts" and few "joins" or "continues" on any one car could be an indication of a control or coin mech problem.

Unlike many games, whose best income is a result of a 2 to 2.5 minute average game time, collections from ***"SUPER OFF-ROAD"*** **TM** are highest when the average game time is between 3.25 and 3.75 minutes. Your players get more for their money!

Country Selection (Figure 14)

When a player begins a game, he or she is given a choice of countries for whom he or she will race. This section allows you to further customize your game by choosing which eight countries will appear on the country selection screen. You may also choose a preselected list of American or European countries.

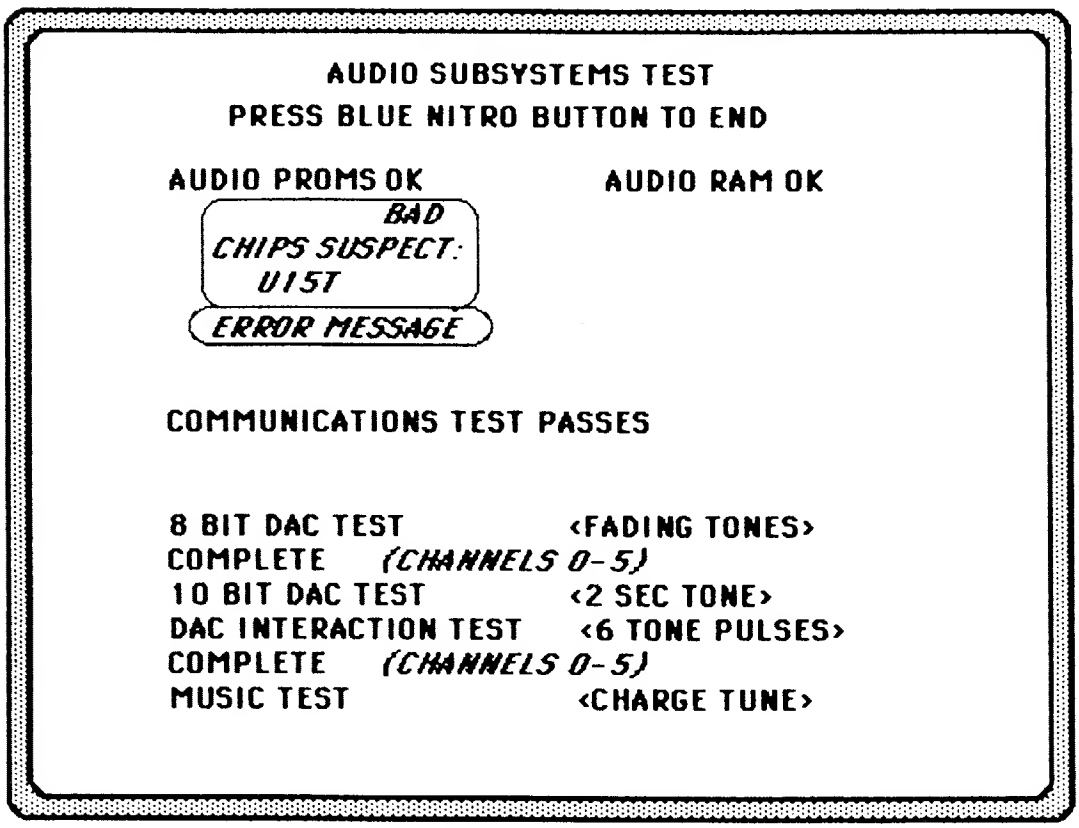

FIGURE 9

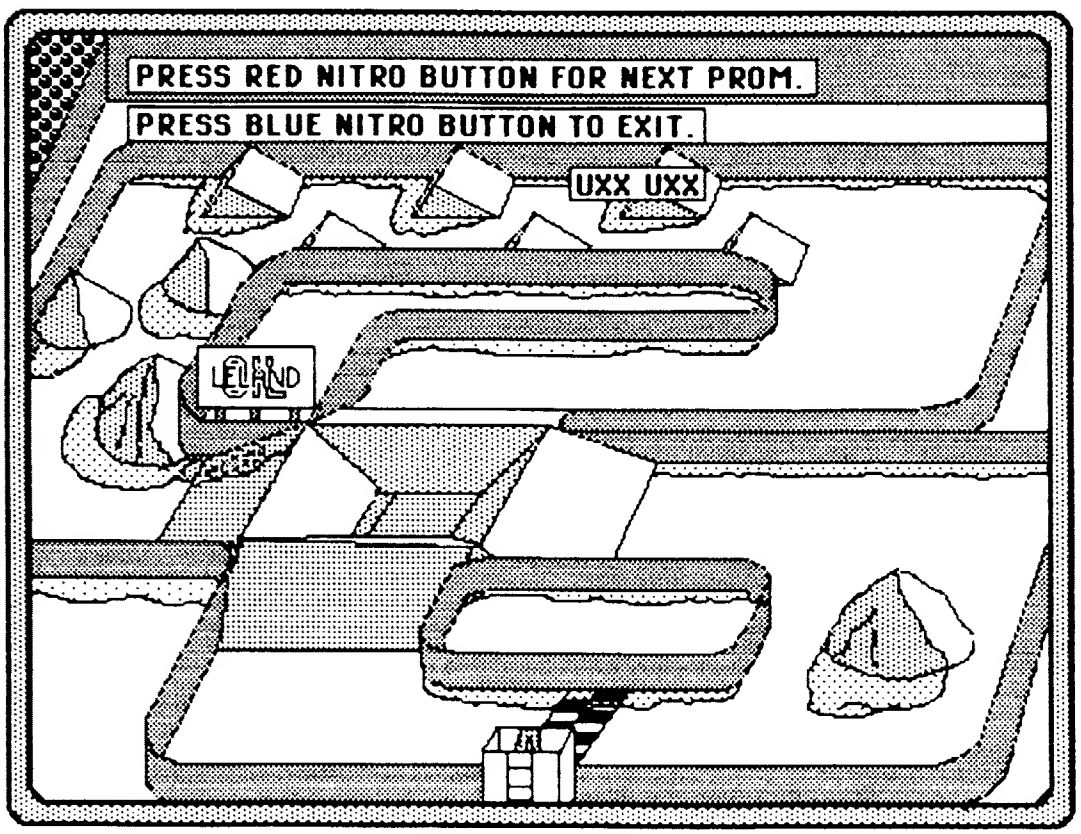

FIGURE 10

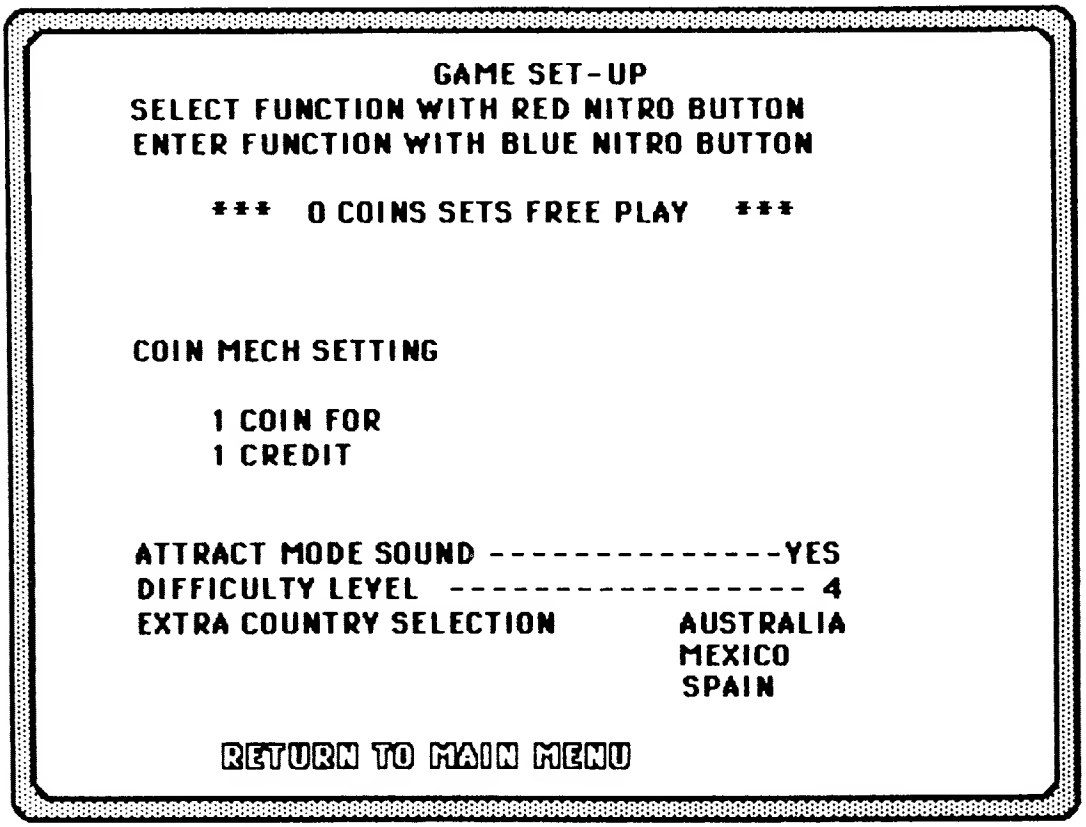

FIGURE 11

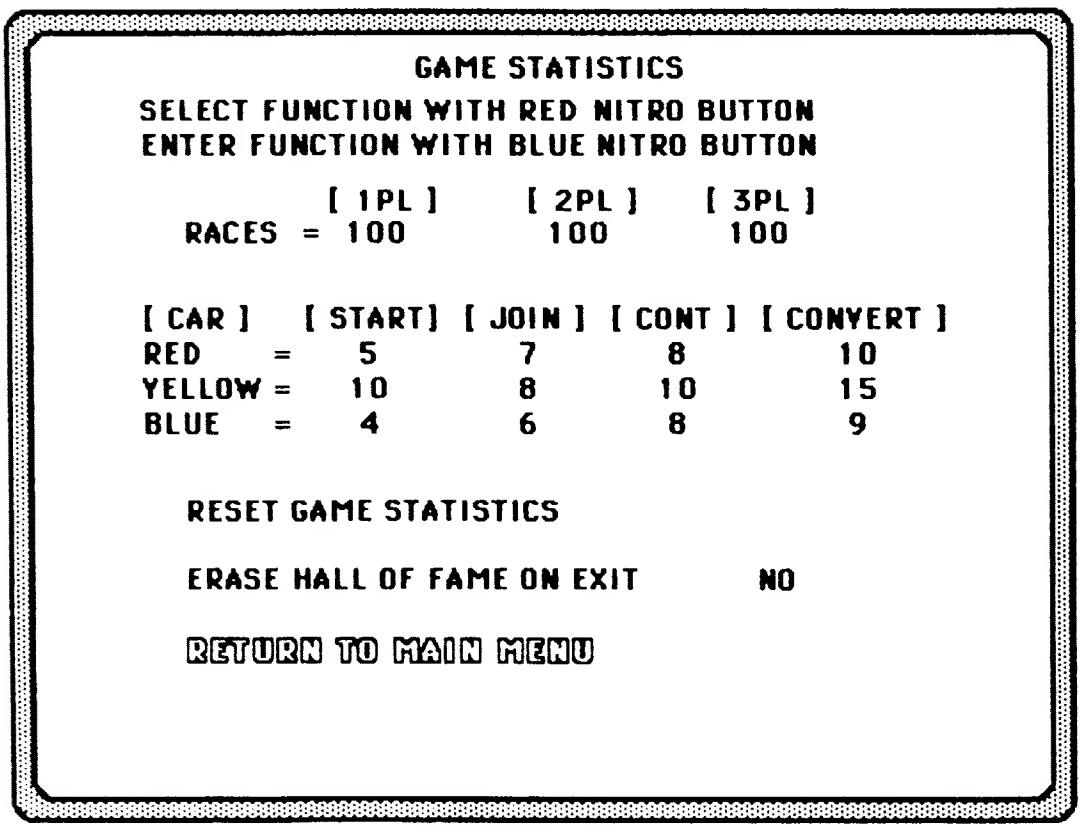

FIGURE 12

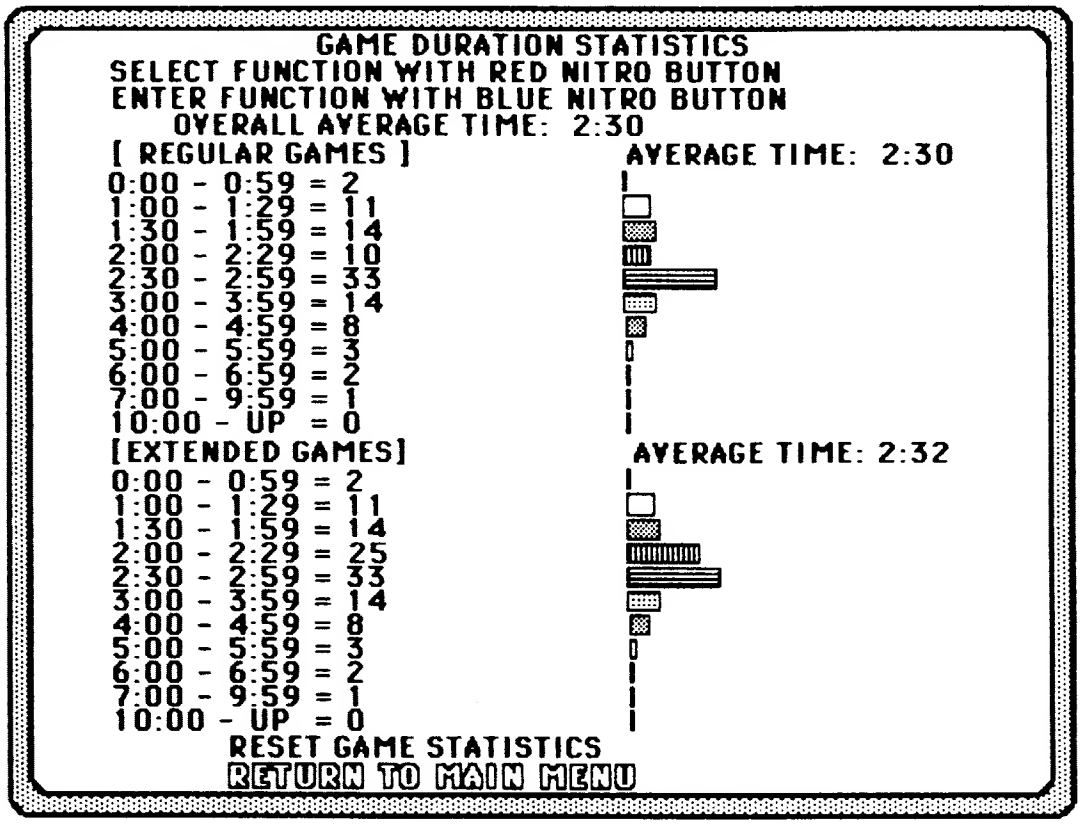

FIGURE 13

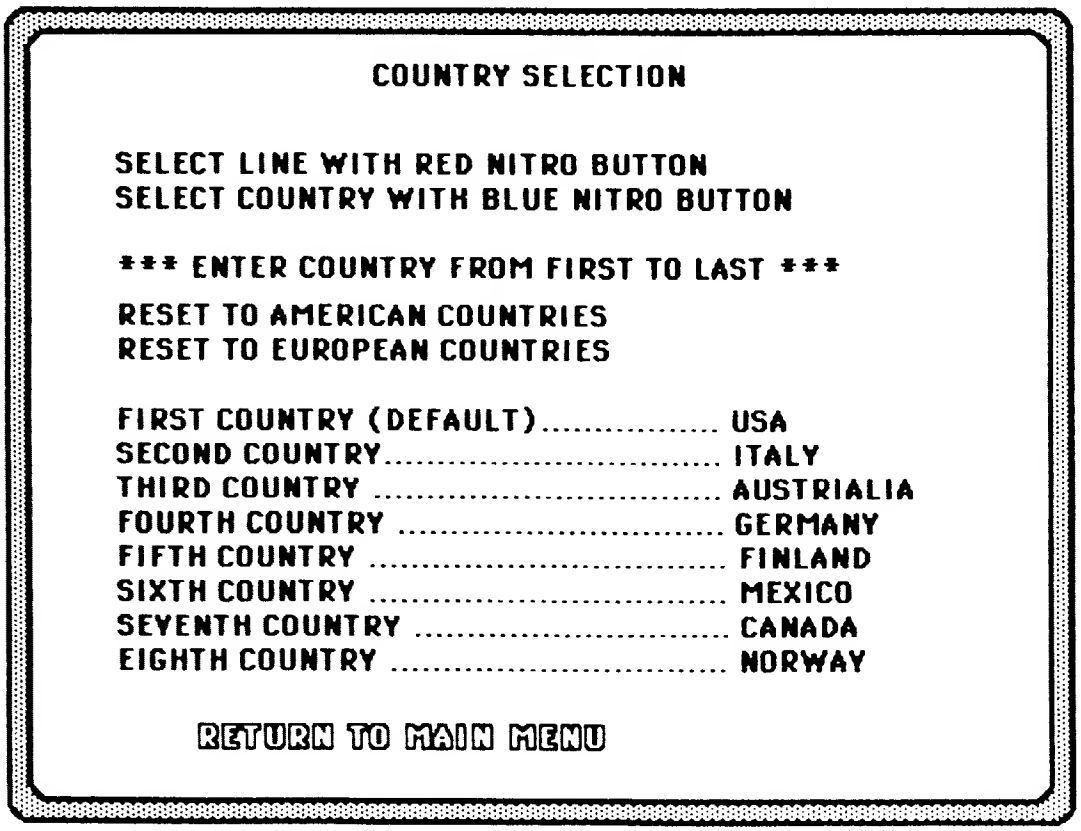

FIGURE 14

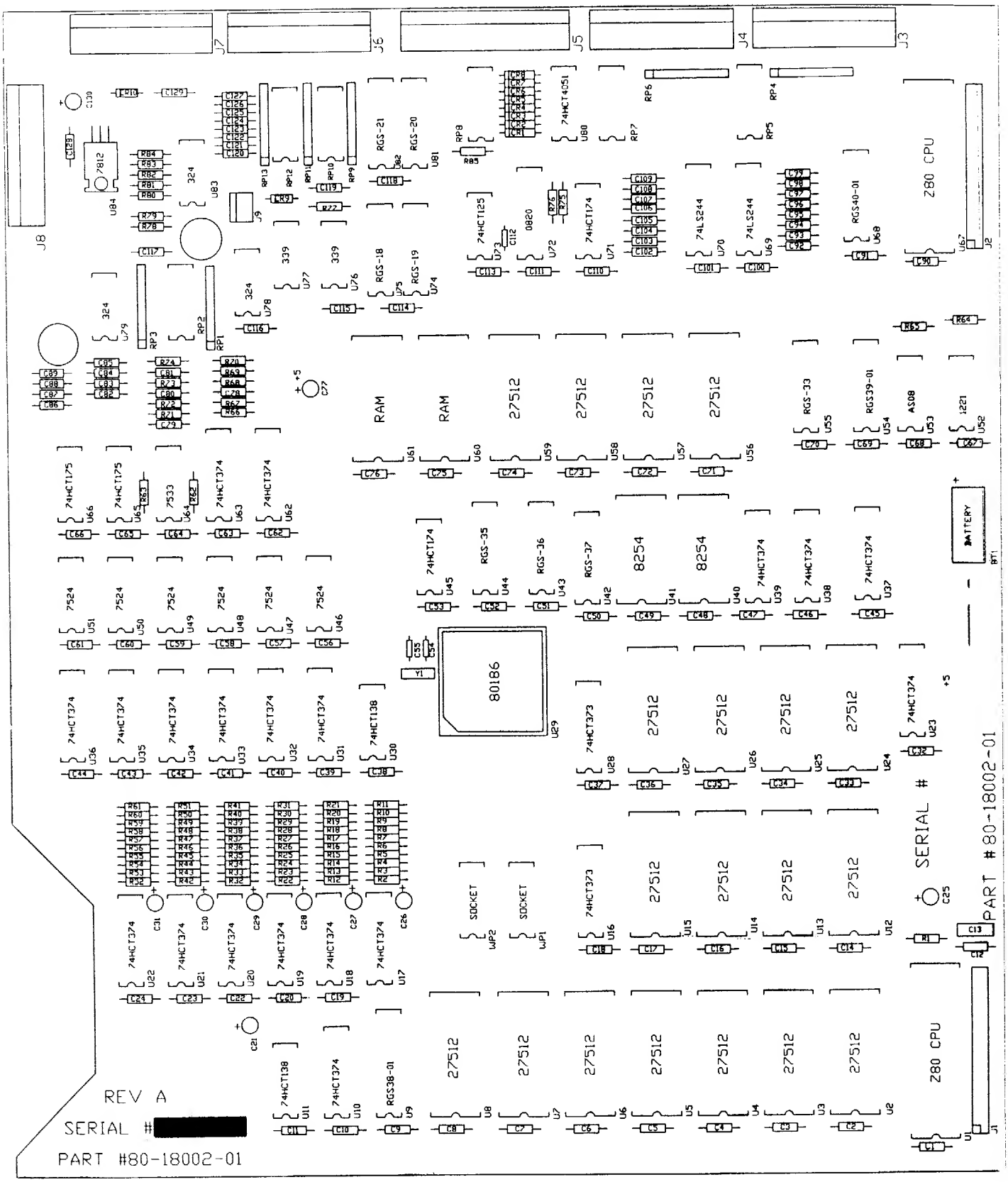
REV A
SERIAL #[redacted]
PART #80-18002-01
SERIAL #
PART #80-18002-01
Z80 CPU
Z80 CPU
80186
RAM
RAM
27512
8254
8254
SOCKET
SOCKET
BATTERY

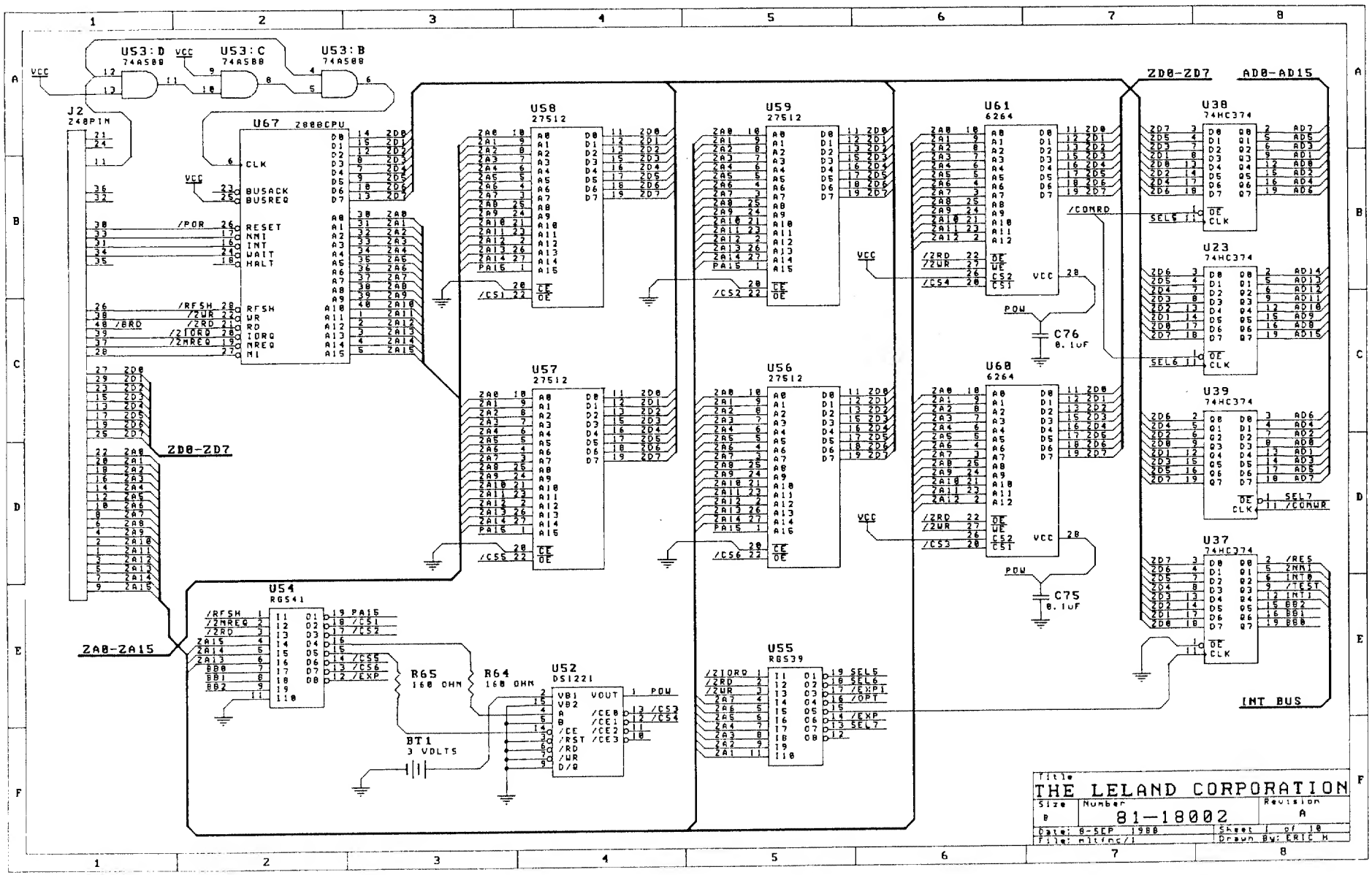
U53:D 74A588
U53:C 74A588
U53:B 74A588
VCC
J2 Z48PIN
U67 Z888CPU
CLK
BUSACK
BUSREQ
RESET
NMI
INT
WAIT
HALT
RFSH
WR
RD
IORQ
MREQ
M1
/POR
/RFSH
/2WR
/2RD
/2IORQ
/2MREQ
U58 27512
U59 27512
U57 27512
U56 27512
U61 6264
U60 6264
/COMRD
/2RD
/2WR
/CS4
/CS3
/CS2
/CS1
/CS6
/CS5
POW
C76 0.1UF
C75 0.1UF
ZD0-ZD7
AD0-AD15
U38 74HC374
U23 74HC374
U39 74HC374
U37 74HC374
SEL5
SEL6
SEL7
/CONWR
ZA0-ZA15
U54 RG541
/RFSH
/2MREQ
/2RD
/CS1
/CS2
/CS5
/CS6
/EXP
R65 160 OHM
R64 160 OHM
BT1 3 VOLTS
U52 DS1221
VB1
VB2
VOUT
/CE0
/CE1
/CE2
/CE3
/RST
/RD
/WR
D/Q
U55 RBS39
/2IORQ
/EXP1
/OPT
SEL5
SEL6
SEL7
INT BUS
Title
THE LELAND CORPORATION
Size B
Number 81-18002
Revision A
Date: 8-SEP 1988
Sheet 1 of 10
File: mlfnc/1
Drawn By: ERIC M

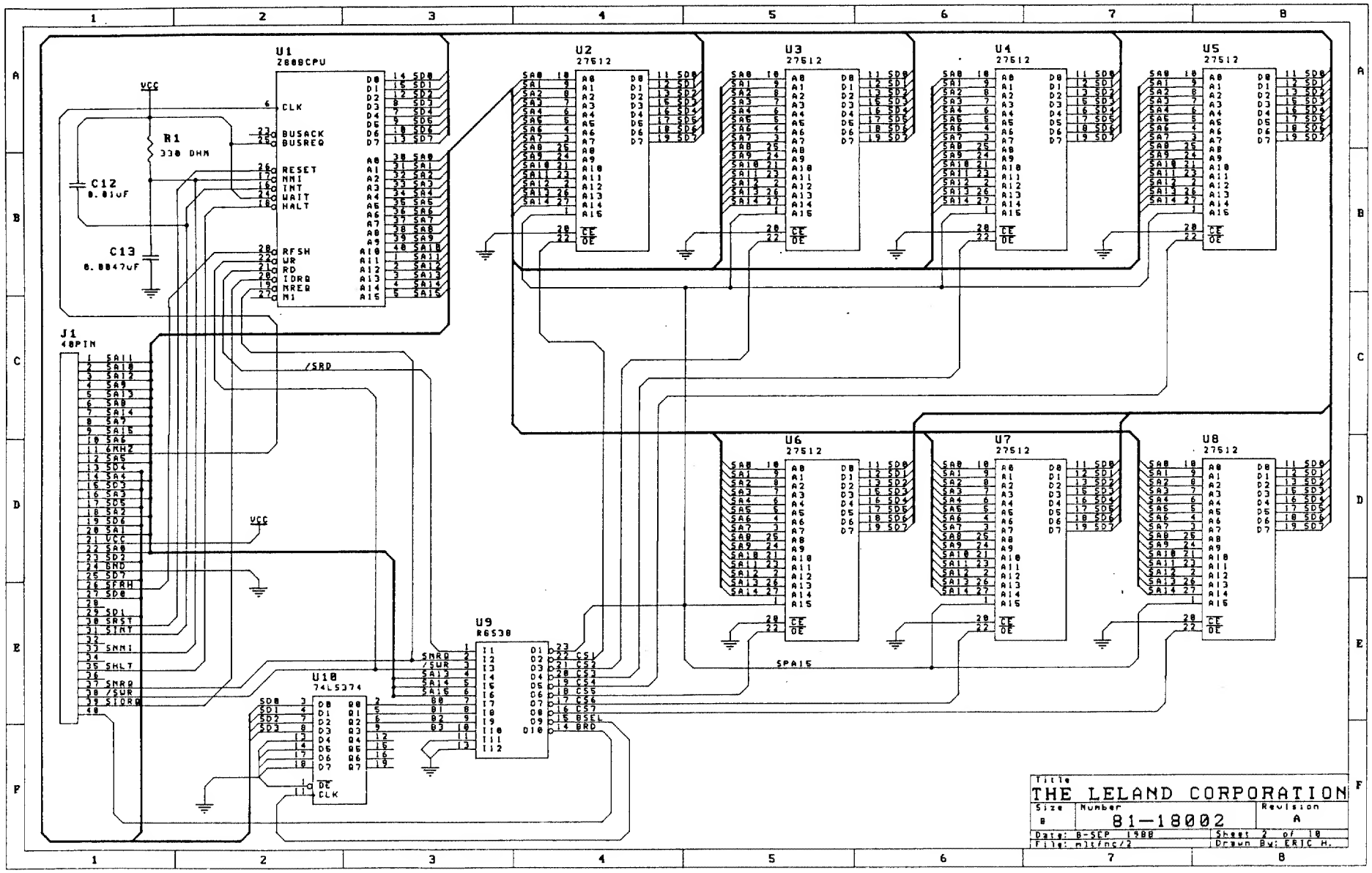
U1
Z80BCPU
U2
27512
U3
27512
U4
27512
U5
27512
U6
27512
U7
27512
U8
27512
U9
R6538
U10
74LS374
J1
40PIN
R1
330 OHM
C12
0.01uF
C13
0.0047uF
VCC
/SRD
SPA15
Title
THE LELAND CORPORATION
Size
B
Number
81-18002
Revision
A
Date: 8-SEP 1988
Sheet 2 of 10
File: mlt/nc/2
Drawn By: ERIC H.

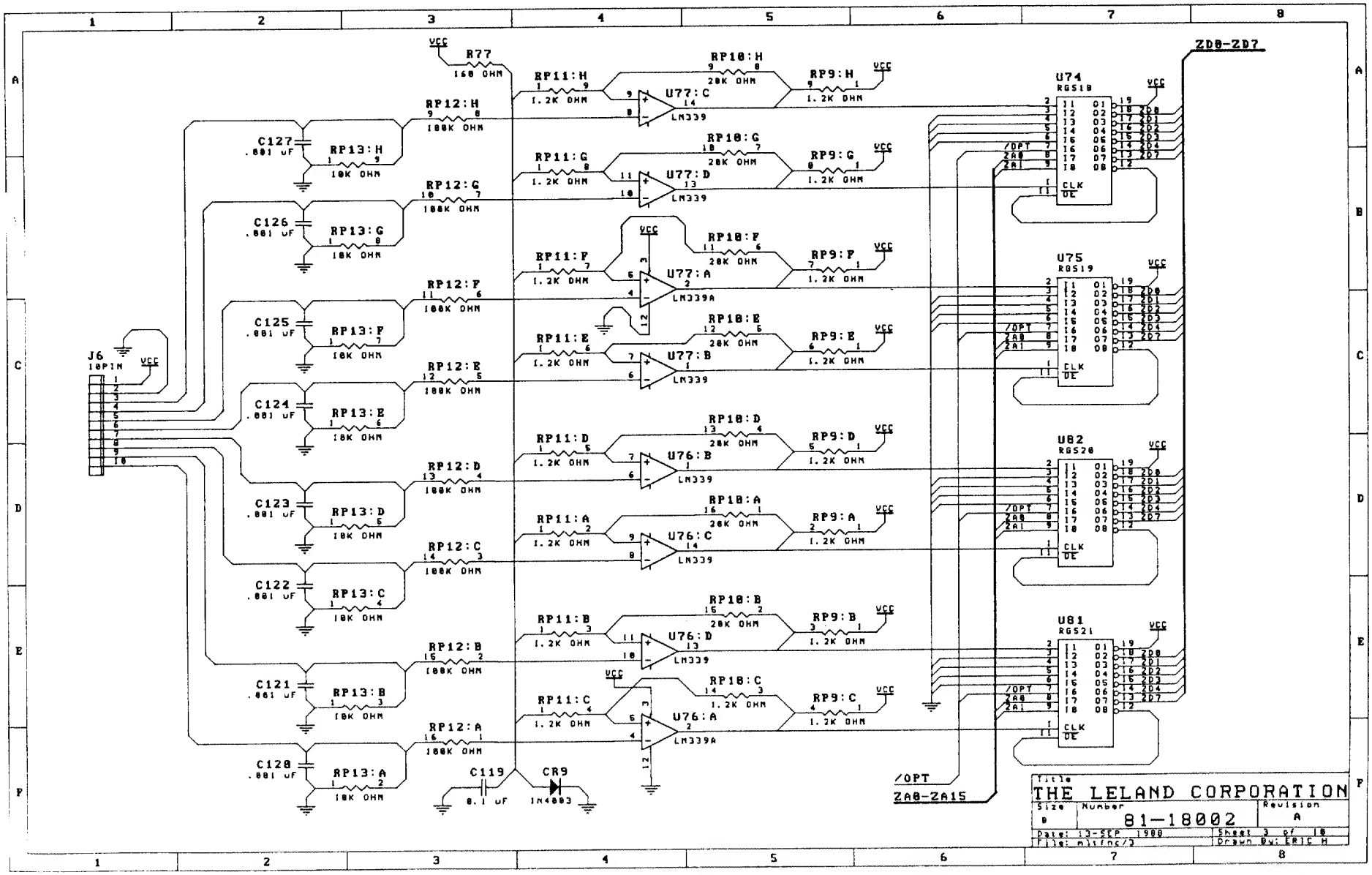

J6
10PIN
VCC
R77
160 OHM
C127
.001 uF
C126
.001 uF
C125
.001 uF
C124
.001 uF
C123
.001 uF
C122
.001 uF
C121
.001 uF
C120
.001 uF
RP13:H
RP13:G
RP13:F
RP13:E
RP13:D
RP13:C
RP13:B
RP13:A
10K OHM
RP12:H
RP12:G
RP12:F
RP12:E
RP12:D
RP12:C
RP12:B
RP12:A
100K OHM
RP11:H
RP11:G
RP11:F
RP11:E
RP11:D
RP11:A
RP11:B
RP11:C
1.2K OHM
U77:C
U77:D
U77:A
U77:B
U76:B
U76:C
U76:D
U76:A
LM339
LM339A
RP10:H
RP10:G
RP10:F
RP10:E
RP10:D
RP10:A
RP10:B
RP10:C
20K OHM
RP9:H
RP9:G
RP9:F
RP9:E
RP9:D
RP9:A
RP9:B
RP9:C
C119
0.1 uF
CR9
1N4003
U74
RGS18
U75
RGS19
U82
RGS20
U81
RGS21
CLK
OE
/OPT
ZA0
ZA1
ZD0-ZD7
ZA0-ZA15
Title
THE LELAND CORPORATION
Size
B
Number
81-18002
Revision
A
Date: 13-SEP 1988
File: mltfnc/3
Sheet 3 of 10
Drawn By: ERIC H

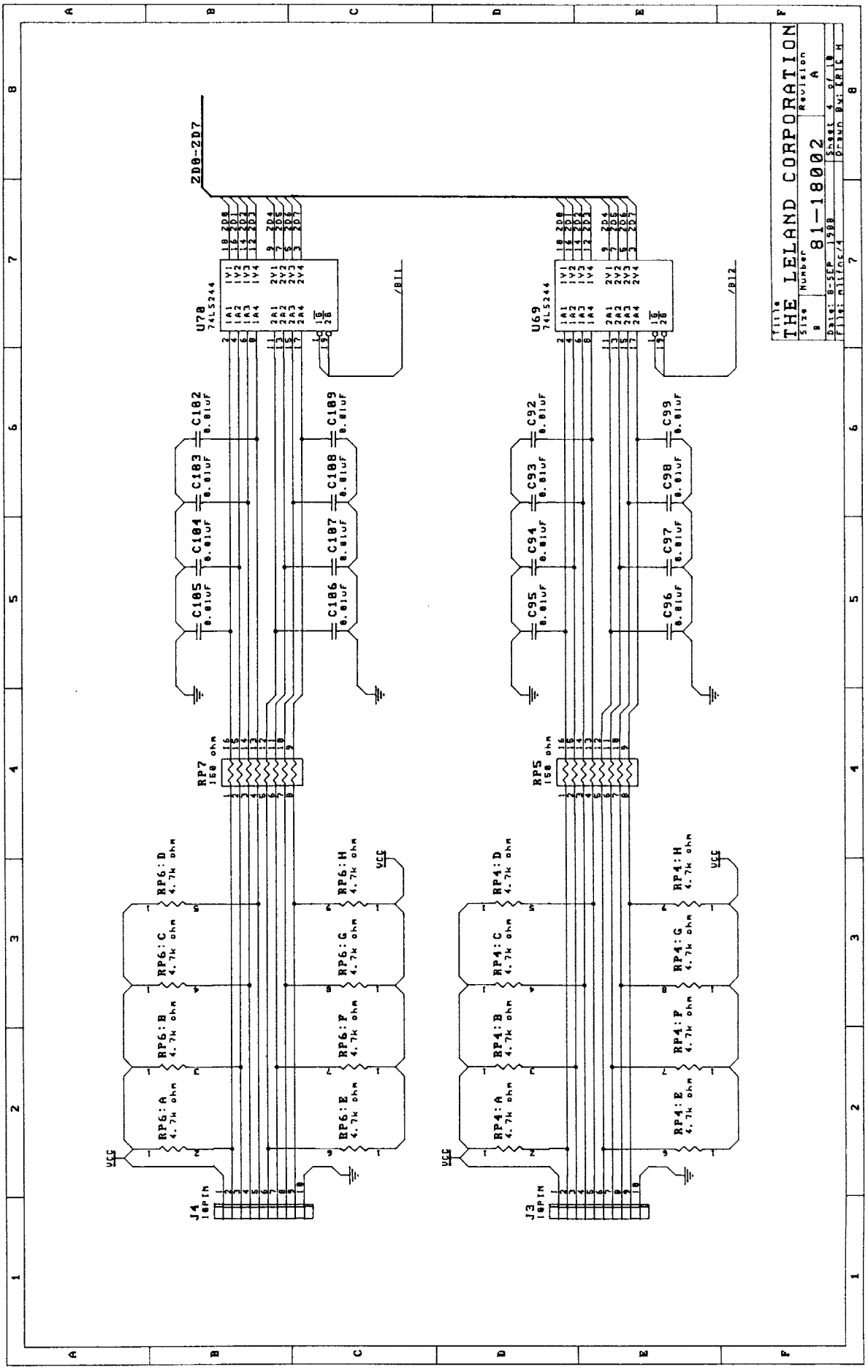
THE LELAND CORPORATION
81-18002
Revision A
Sheet 4 of 18
Drawn By: ERIC H
ZD0-ZD7
U70
74LS244
U69
74LS244
/B11
/B12
C182
C183
C184
C185
C186
C189
C188
C187
C92
C93
C94
C95
C96
C99
C98
C97
RP7
150 ohm
RP5
150 ohm
RP6:A
RP6:B
RP6:C
RP6:D
RP6:E
RP6:F
RP6:G
RP6:H
RP4:A
RP4:B
RP4:C
RP4:D
RP4:E
RP4:F
RP4:G
RP4:H
4.7k ohm
VCC
J4
J3
16PIN

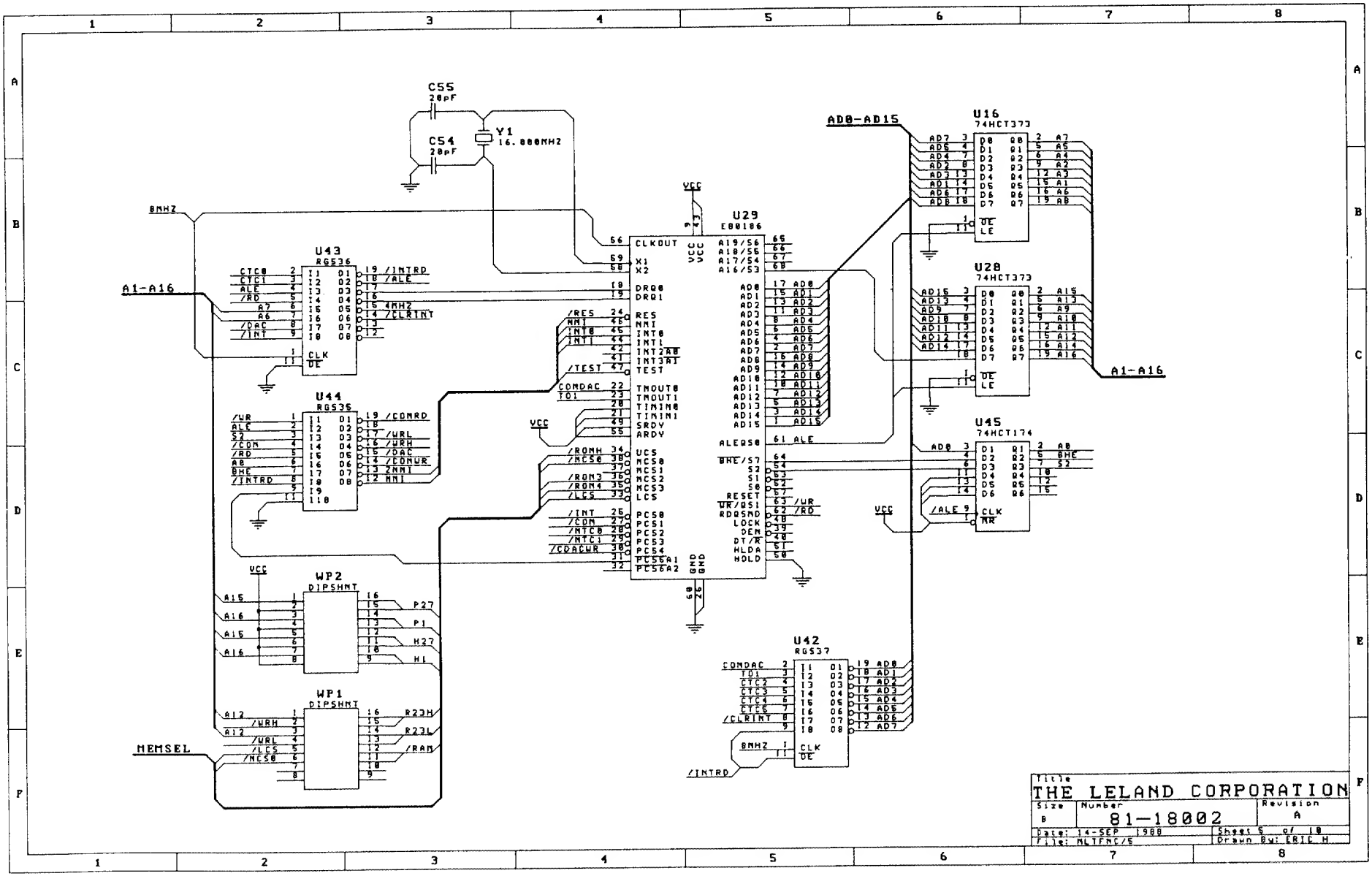
C55
20pF
C54
20pF
Y1
16.000MHZ
8MHZ
A1-A16
U43
RG536
U44
RG535
U29
E80186
U16
74HCT373
U28
74HCT373
U45
74HCT174
U42
RG537
AD0-AD15
A1-A16
WP2
DIPSHNT
WP1
DIPSHNT
MEMSEL
VCC
Title
THE LELAND CORPORATION
Size
B
Number
81-18002
Revision
A
Date: 14-SEP 1988
Sheet 5 of 10
File: MLTFNC/5
Drawn By: ERIC H

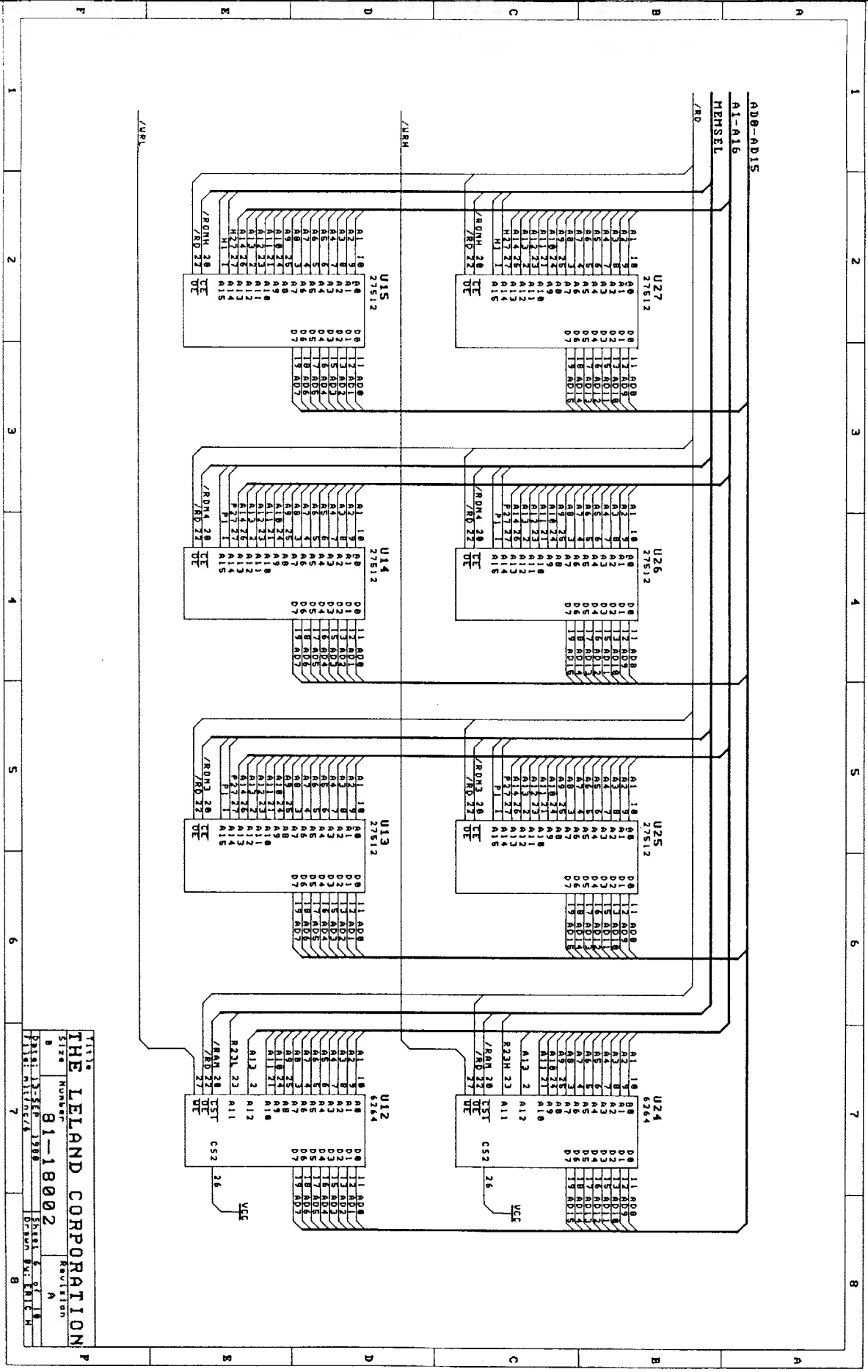
AD0-AD15
A1-A16
MEMSEL
/RD
/WRH
/WRL
U27
27512
U26
27512
U25
27512
U24
6264
U15
27512
U14
27512
U13
27512
U12
6264
Title
THE LELAND CORPORATION
Size
B
Number
81-18002
Revision
A
Date: 13-SEP 1988
Sheet 6 of 10
Drawn By: ERIC H

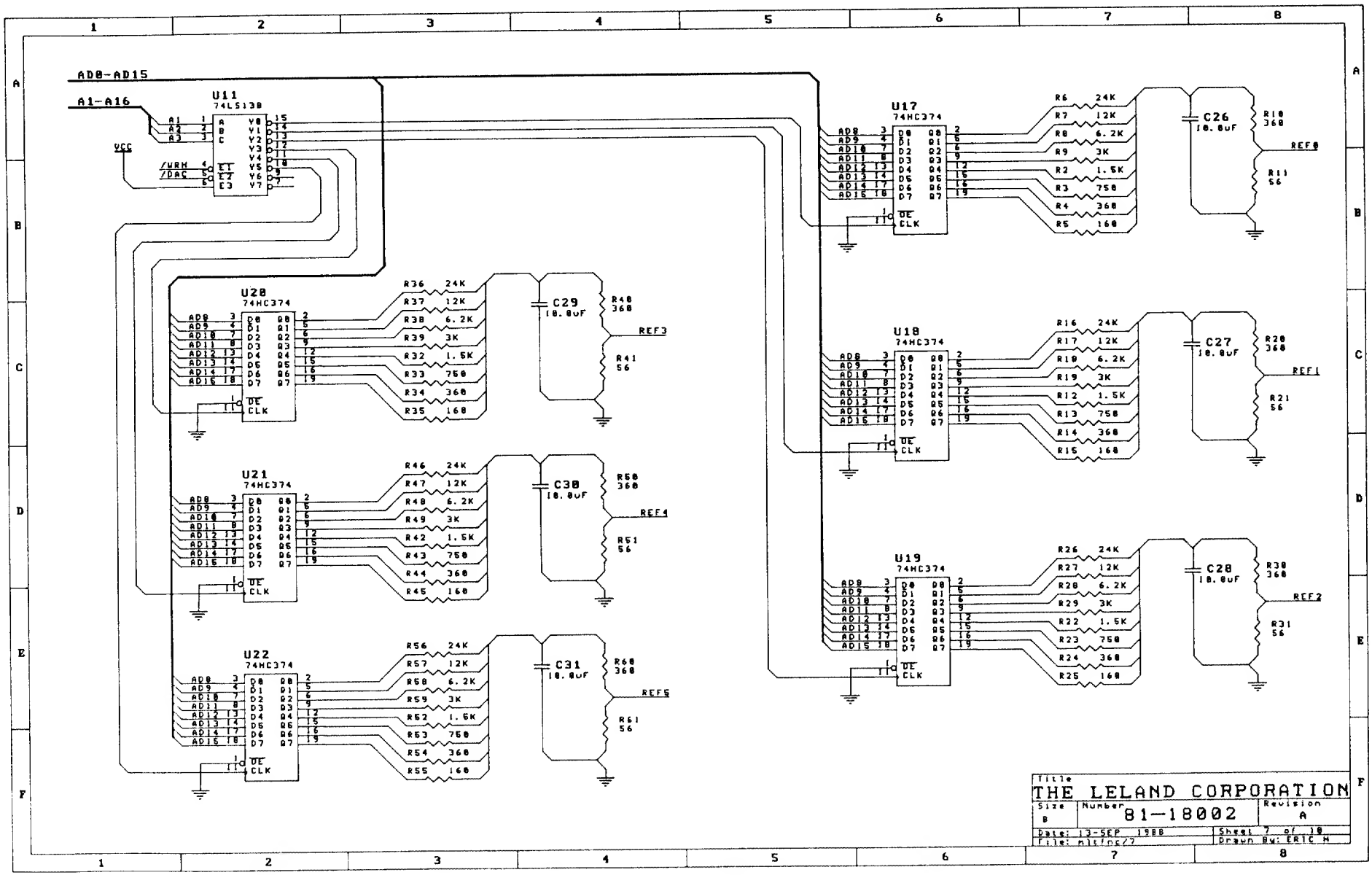
AD0-AD15
A1-A16
VCC
/WRH
/DAC
U11
74LS138
U17
74HC374
U18
74HC374
U19
74HC374
U20
74HC374
U21
74HC374
U22
74HC374
C26
10.0uF
C27
10.0uF
C28
10.0uF
C29
10.0uF
C30
10.0uF
C31
10.0uF
REF0
REF1
REF2
REF3
REF4
REF5
Title
THE LELAND CORPORATION
Size
B
Number
81-18002
Revision
A
Date: 13-SEP 1988
Sheet 7 of 10
File: mltfnc/7
Drawn By: ERIC H

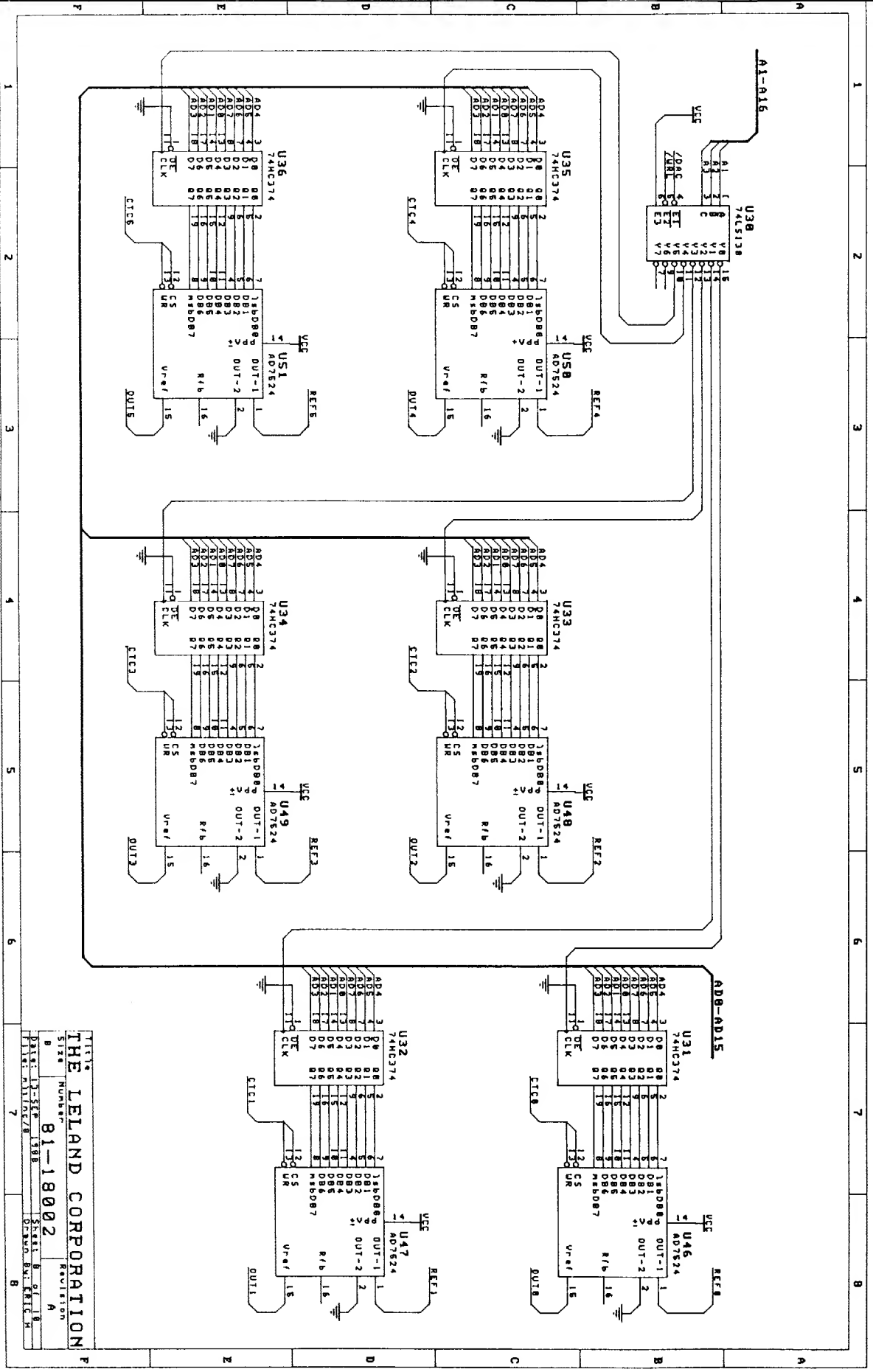
A1-A16
U30
74LS138
U35
74HC374
U36
74HC374
U50
AD7524
U51
AD7524
U33
74HC374
U34
74HC374
U48
AD7524
U49
AD7524
AD8-AD15
U31
74HC374
U32
74HC374
U46
AD7524
U47
AD7524
THE LELAND CORPORATION
81-18002

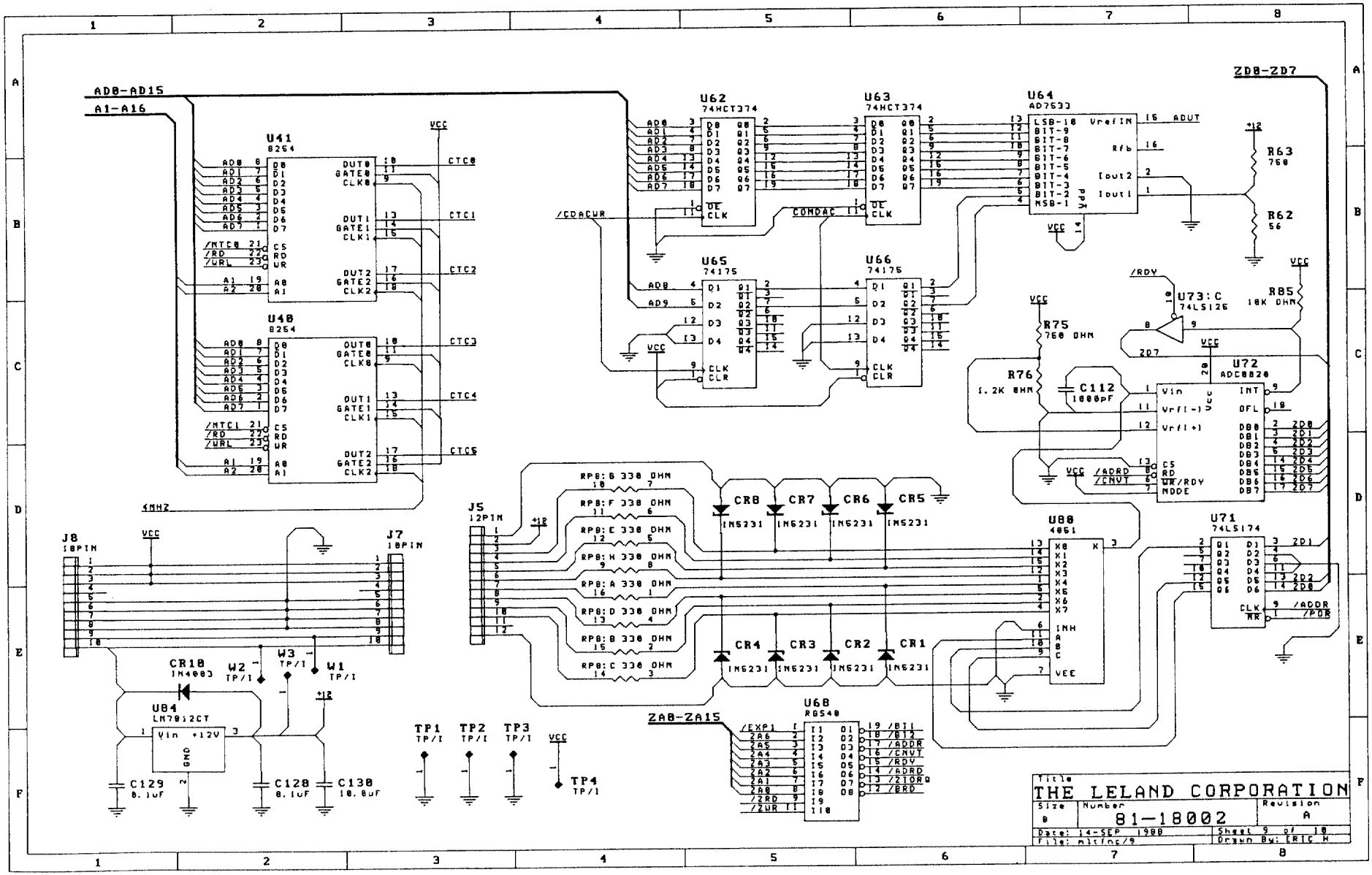
AD0-AD15
A1-A16
ZD0-ZD7
U41
8254
U42
8254
U62
74HCT374
U63
74HCT374
U64
AD7533
U65
74175
U66
74175
U72
ADC0820
U73:C
74LS126
U80
4051
U71
74LS174
U68
RG540
U84
LM7812CT
J5
12PIN
J8
18PIN
J7
18PIN
4MHZ
/CDACWR
COMDAC
/RDY
/ADRD
/CNVT
/ADDR
/PDR
ZA8-ZA15
R63
75Ω
R62
56
R75
75Ω OHM
R76
1.2K OHM
R85
10K OHM
C112
1000pF
C129
0.1uF
C128
0.1uF
C130
10.0uF
CR10
IN4003
CR8
CR7
CR6
CR5
CR4
CR3
CR2
CR1
IN5231
W1
W2
W3
TP1
TP2
TP3
TP4
TP/I
THE LELAND CORPORATION
81-18002
Size
B
Number
Revision
A
Date: 14-SEP 1980
Sheet 9 of 18
File: mitinc/9
Drawn By: ERIC H

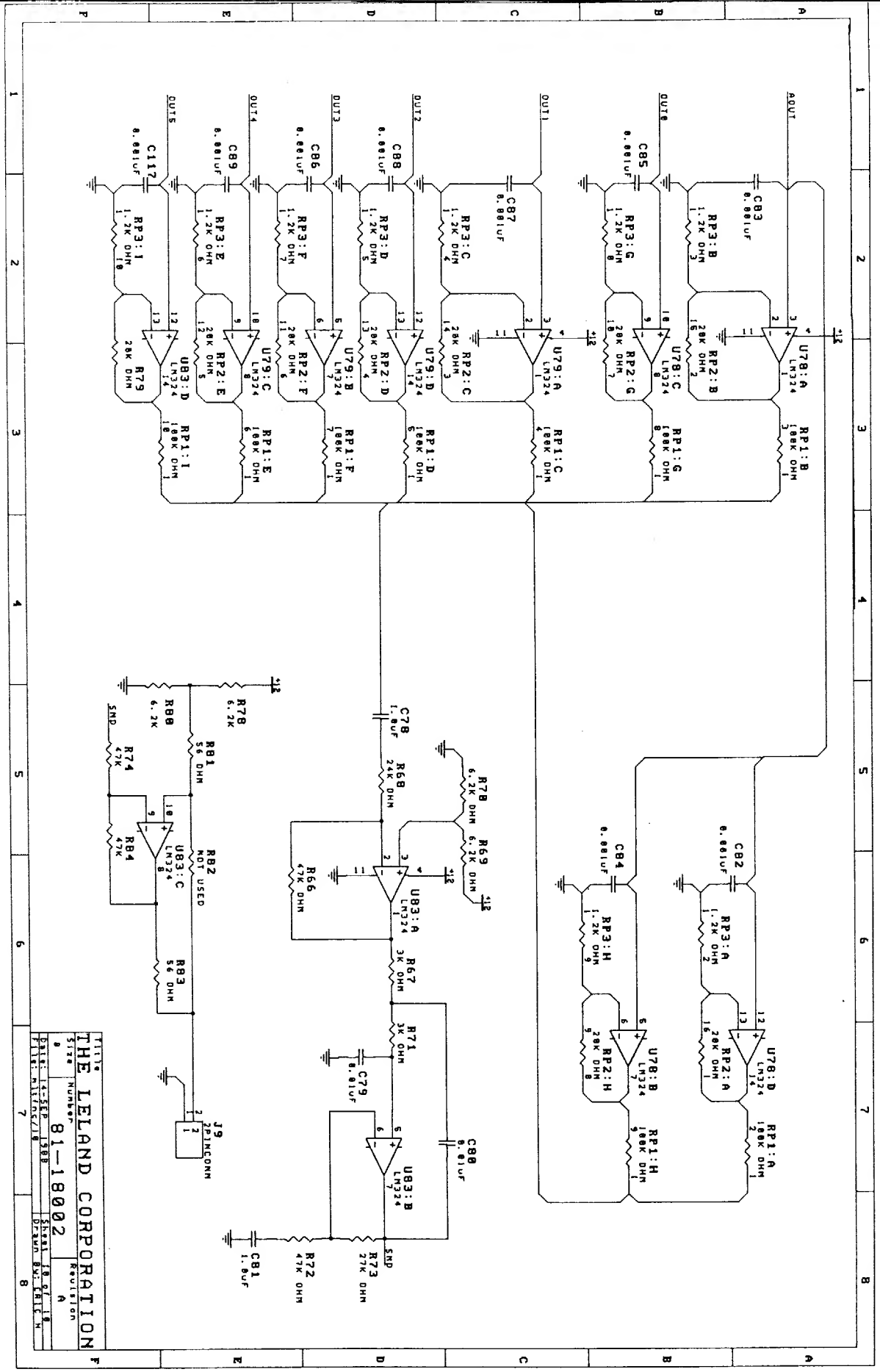
THE LELAND CORPORATION
81-18002
Title
Size
Number
Revision
A
Date: 14-SEP 1988
Sheet 10 of 10
File: mltfnc/10
Drawn By: CRIC N
AOUT
OUT0
OUT1
OUT2
OUT3
OUT4
OUT5
U78:A LM324
U78:B LM324
U78:C LM324
U78:D LM324
U79:A LM324
U79:B LM324
U79:C LM324
U79:D LM324
U83:A LM324
U83:B LM324
U83:C LM324
U83:D LM324
RP1:A 100K OHM
RP1:B 100K OHM
RP1:C 100K OHM
RP1:D 100K OHM
RP1:E 100K OHM
RP1:F 100K OHM
RP1:G 100K OHM
RP1:H 100K OHM
RP1:I 100K OHM
RP2:A 20K OHM
RP2:B 20K OHM
RP2:C 20K OHM
RP2:D 20K OHM
RP2:E 20K OHM
RP2:F 20K OHM
RP2:G 20K OHM
RP2:H 20K OHM
RP3:A 1.2K OHM
RP3:B 1.2K OHM
RP3:C 1.2K OHM
RP3:D 1.2K OHM
RP3:E 1.2K OHM
RP3:F 1.2K OHM
RP3:G 1.2K OHM
RP3:H 1.2K OHM
RP3:I 1.2K OHM
C81 1.0uF
C82 0.001uF
C83 0.001uF
C84 0.001uF
C85 0.001uF
C86 0.001uF
C87 0.001uF
C88 0.001uF
C89 0.001uF
C117 0.001uF
C78 1.0uF
C79 0.01uF
C80 0.01uF
R66 47K OHM
R67 3K OHM
R68 24K OHM
R69 6.2K OHM
R71 3K OHM
R72 47K OHM
R73 27K OHM
R74 47K
R78 6.2K
R80 6.2K
R81 56 OHM
R82 NOT USED
R83 56 OHM
R84 47K
J9 2PINCONN
SND

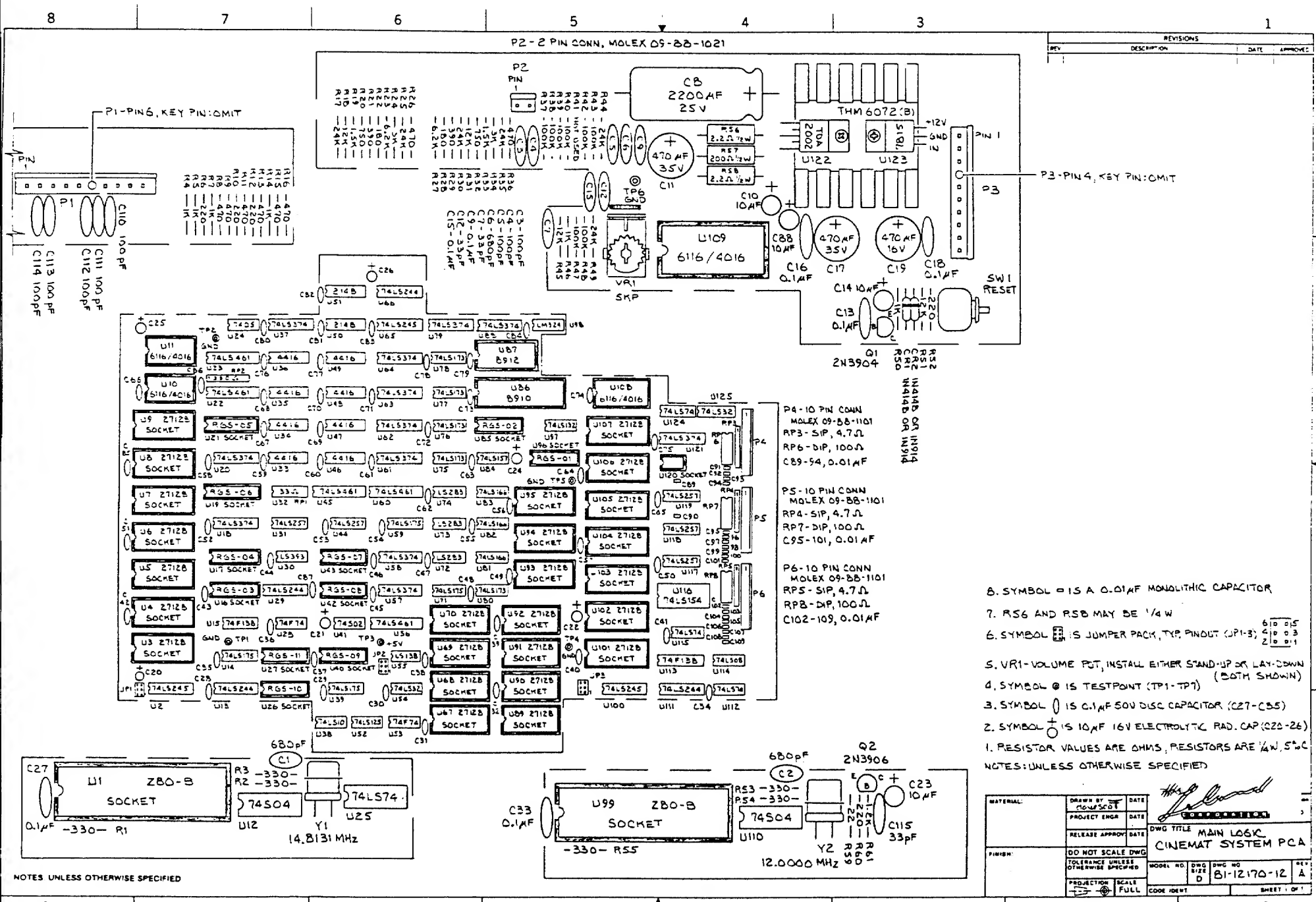

8. SYMBOL ▭ IS A 0.01μF MONOLITHIC CAPACITOR
7. R56 AND R58 MAY BE 1/4 W
6. SYMBOL ⊞ IS JUMPER PACK, TYP. PINOUT (JP1-3)
5. VR1-VOLUME POT, INSTALL EITHER STAND-UP OR LAY-DOWN (BOTH SHOWN)
4. SYMBOL @ IS TESTPOINT (TP1-TP7)
3. SYMBOL ◯ IS 0.1μF 50V DISC CAPACITOR (C27-C35)
2. SYMBOL ⊕ IS 10μF 16V ELECTROLYTIC RAD. CAP (C20-26)
1. RESISTOR VALUES ARE OHMS, RESISTORS ARE 1/4W, 5%C

NOTES: UNLESS OTHERWISE SPECIFIED

REVISIONS			
REV	DESCRIPTION	DATE	APPROVED

MATERIAL:
FINISH:
DRAWN BY: MONASCO
PROJECT ENGR
RELEASE APPROV
DO NOT SCALE DWG
TOLERANCE UNLESS OTHERWISE SPECIFIED
PROJECTION
SCALE FULL

DWG TITLE: MAIN LOGIC CINEMAT SYSTEM PCA
MODEL NO.
DWG SIZE D
DWG NO 81-12170-12
REV A
CODE IDENT
SHEET 1 OF 1

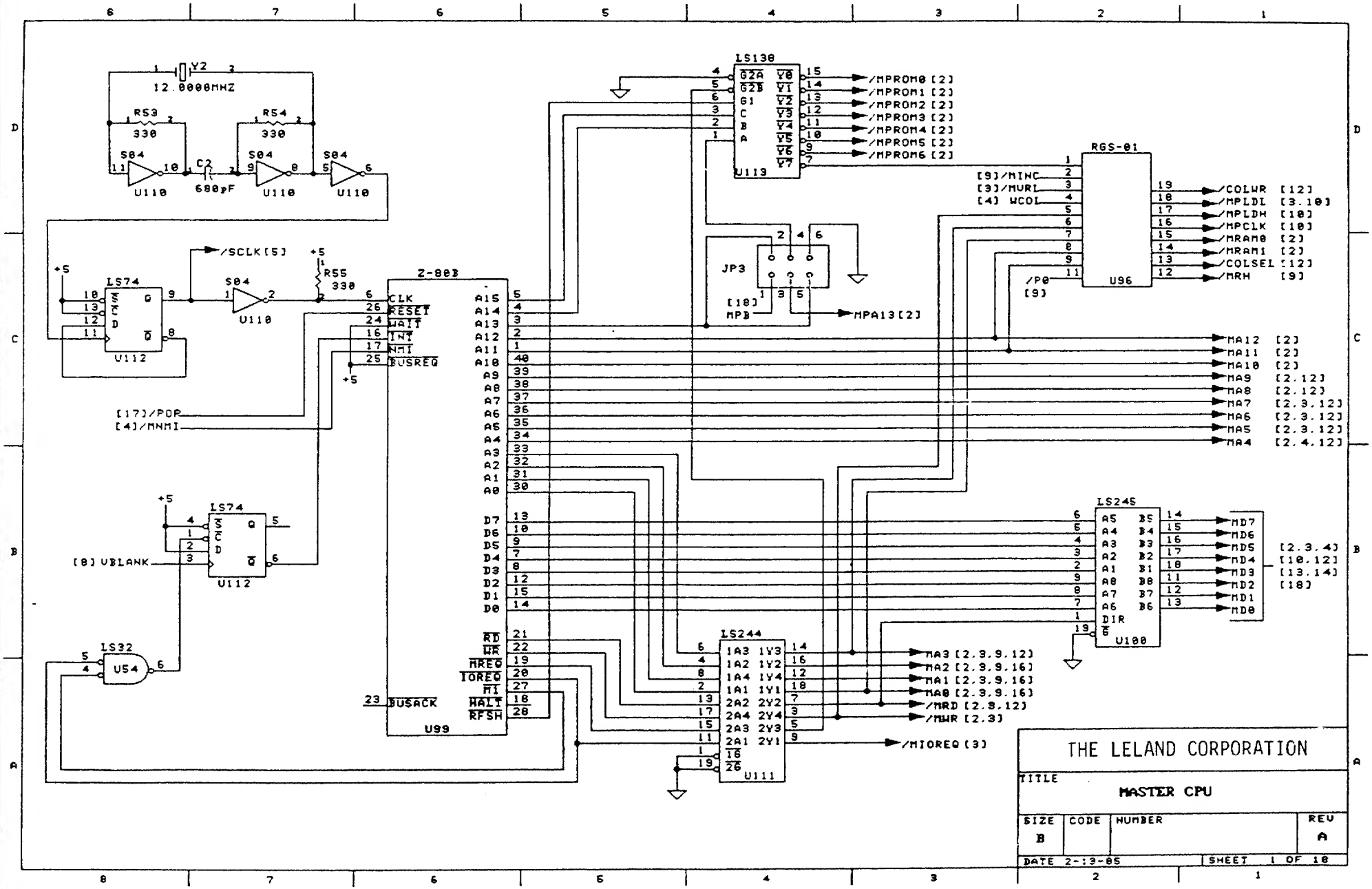

Y2
12.0000MHZ
R53
330
R54
330
S04
U110
C2
680pF
LS74
U112
/SCLK[5]
R55
330
Z-80B
U99
CLK
RESET
WAIT
INT
NMI
BUSREQ
BUSACK
[17]/POP
[4]/MNMI
[8] VBLANK
LS32
U54
LS138
U113
/MPROM0 [2]
/MPROM1 [2]
/MPROM2 [2]
/MPROM3 [2]
/MPROM4 [2]
/MPROM5 [2]
/MPROM6 [2]
JP3
[18] MPB
MPA13 [2]
RGS-01
U96
[9]/MINC
[3]/MVRL
[4] WCOL
/P0 [9]
/COLWR [12]
/MPLDL [3.10]
/MPLDH [10]
/MPCLK [10]
/MRAM0 [2]
/MRAM1 [2]
/COLSEL [12]
/MRH [9]
MA12 [2]
MA11 [2]
MA10 [2]
MA9 [2.12]
MA8 [2.12]
MA7 [2.3.12]
MA6 [2.3.12]
MA5 [2.3.12]
MA4 [2.4.12]
LS245
U100
MD7
MD6
MD5
MD4
MD3
MD2
MD1
MD0
[2.3.4]
[10.12]
[13.14]
[18]
LS244
U111
MA3 [2.3.9.12]
MA2 [2.3.9.16]
MA1 [2.3.9.16]
MA0 [2.3.9.16]
/MRD [2.3.12]
/MWR [2.3]
/MIOREQ [3]
THE LELAND CORPORATION
TITLE
MASTER CPU
SIZE B
CODE
NUMBER
REV A
DATE 2-13-85
SHEET 1 OF 18

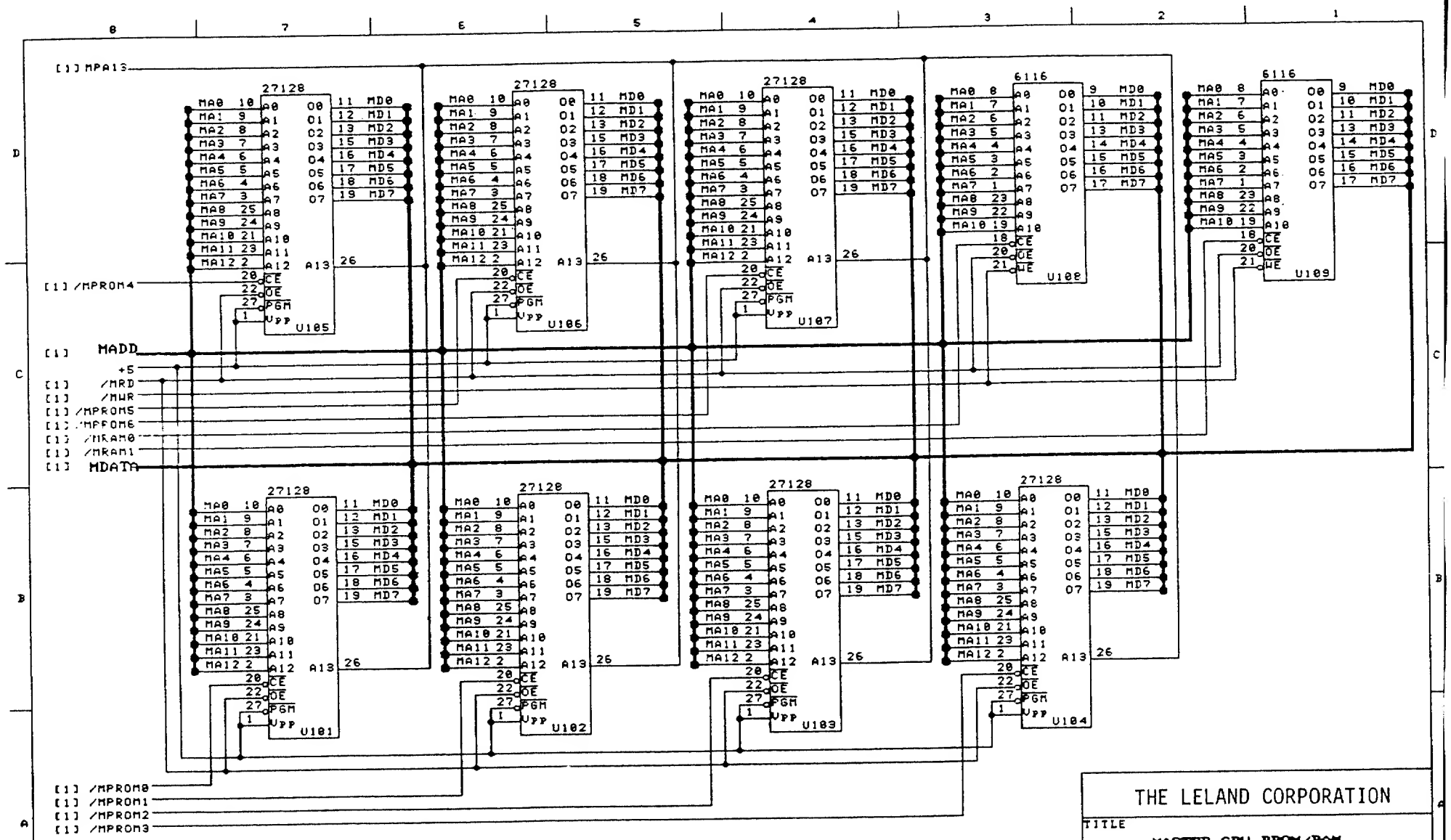
[1] MPA13
[1] /MPROM4
[1] MADD
+5
[1] /MRD
[1] /MWR
[1] /MPROM5
[1] /MPROM6
[1] /MRAM0
[1] /MRAM1
[1] MDATA
[1] /MPROM0
[1] /MPROM1
[1] /MPROM2
[1] /MPROM3
27128
6116
U101
U102
U103
U104
U105
U106
U107
U108
U109
THE LELAND CORPORATION
TITLE
MASTER CPU PROM/RAM
SIZE B
CODE
NUMBER
REV A
DATE 2-13-85
SHEET 2 OF 10

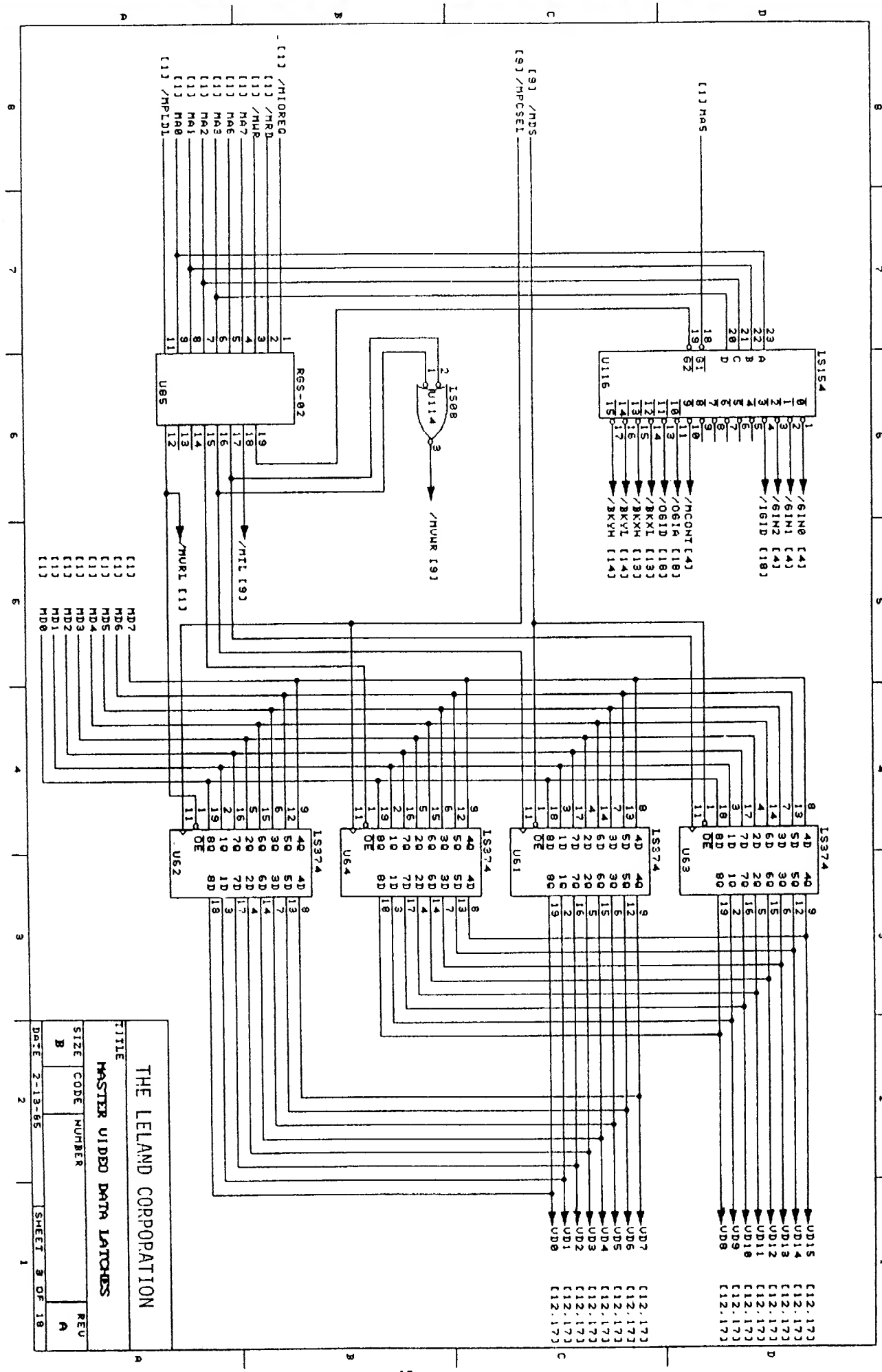
THE LELAND CORPORATION
TITLE
MASTER VIDEO DATA LATCHES
SIZE
B
CODE
NUMBER
REV
A
DATE 2-13-85
SHEET 3 OF 18
LS154
U116
RGS-02
U85
LS08
U114
LS374
U62
U64
U61
U63

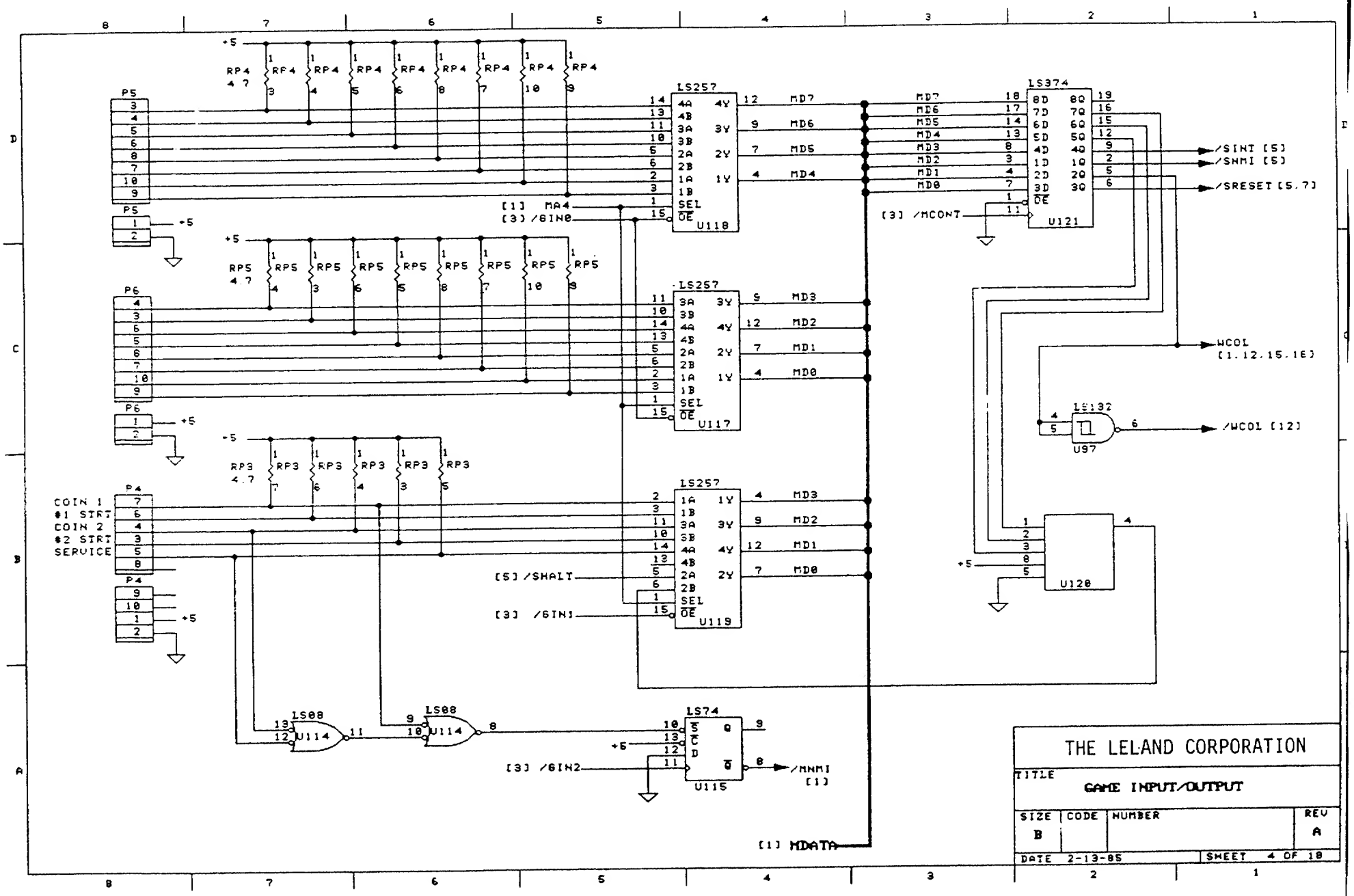
RP4 4.7
RP5 4.7
RP3 4.7
P5
P6
P4
LS257
U118
U117
U119
LS374
U121
LS32
U97
U120
LS08
U114
LS74
U115
COIN 1
#1 STRT
COIN 2
#2 STRT
SERVICE
[1] MA4
[3] /GIN0
[5] /SHALT
[3] /GIN1
[3] /GIN2
[3] /MCONT
[1] MDATA
/SINT [5]
/SNMI [5]
/SRESET [5,7]
WCOL [1,12,15,16]
/WCOL [12]
/NNMI [1]
THE LELAND CORPORATION
TITLE
GAME INPUT/OUTPUT
SIZE B
CODE
NUMBER
REV A
DATE 2-13-85
SHEET 4 OF 18

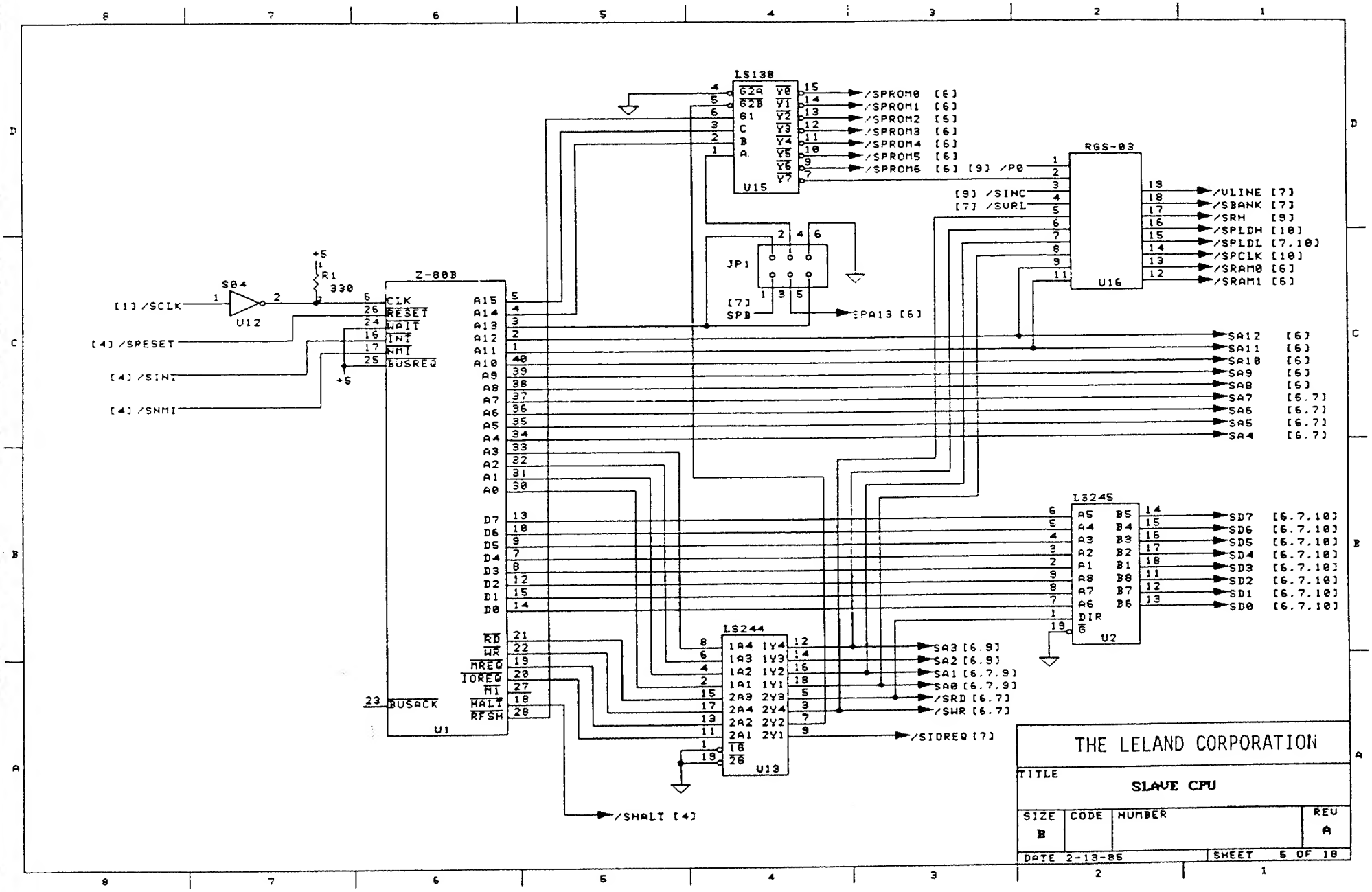
LS138
U15
/SPROM0 [6]
/SPROM1 [6]
/SPROM2 [6]
/SPROM3 [6]
/SPROM4 [6]
/SPROM5 [6]
/SPROM6 [6] [9] /P0
RGS-03
U16
[9] /SINC
[7] /SVRL
/VLINE [7]
/SBANK [7]
/SRH [9]
/SPLDH [10]
/SPLDL [7,10]
/SPCLK [10]
/SRAM0 [6]
/SRAM1 [6]
JP1
[7] SPB
SPA13 [6]
S04
U12
[1] /SCLK
[4] /SRESET
[4] /SINT
[4] /SNMI
R1 330
Z-80B
U1
CLK
RESET
WAIT
INT
NMI
BUSREQ
BUSACK
RD
WR
MREQ
IOREQ
M1
HALT
RFSH
SA12 [6]
SA11 [6]
SA10 [6]
SA9 [6]
SA8 [6]
SA7 [6,7]
SA6 [6,7]
SA5 [6,7]
SA4 [6,7]
LS245
U2
SD7 [6,7,10]
SD6 [6,7,10]
SD5 [6,7,10]
SD4 [6,7,10]
SD3 [6,7,10]
SD2 [6,7,10]
SD1 [6,7,10]
SD0 [6,7,10]
LS244
U13
SA3 [6,9]
SA2 [6,9]
SA1 [6,7,9]
SA0 [6,7,9]
/SRD [6,7]
/SWR [6,7]
/SIOREQ [7]
/SHALT [4]
THE LELAND CORPORATION
TITLE
SLAVE CPU
SIZE B
CODE
NUMBER
REV A
DATE 2-13-85
SHEET 5 OF 18

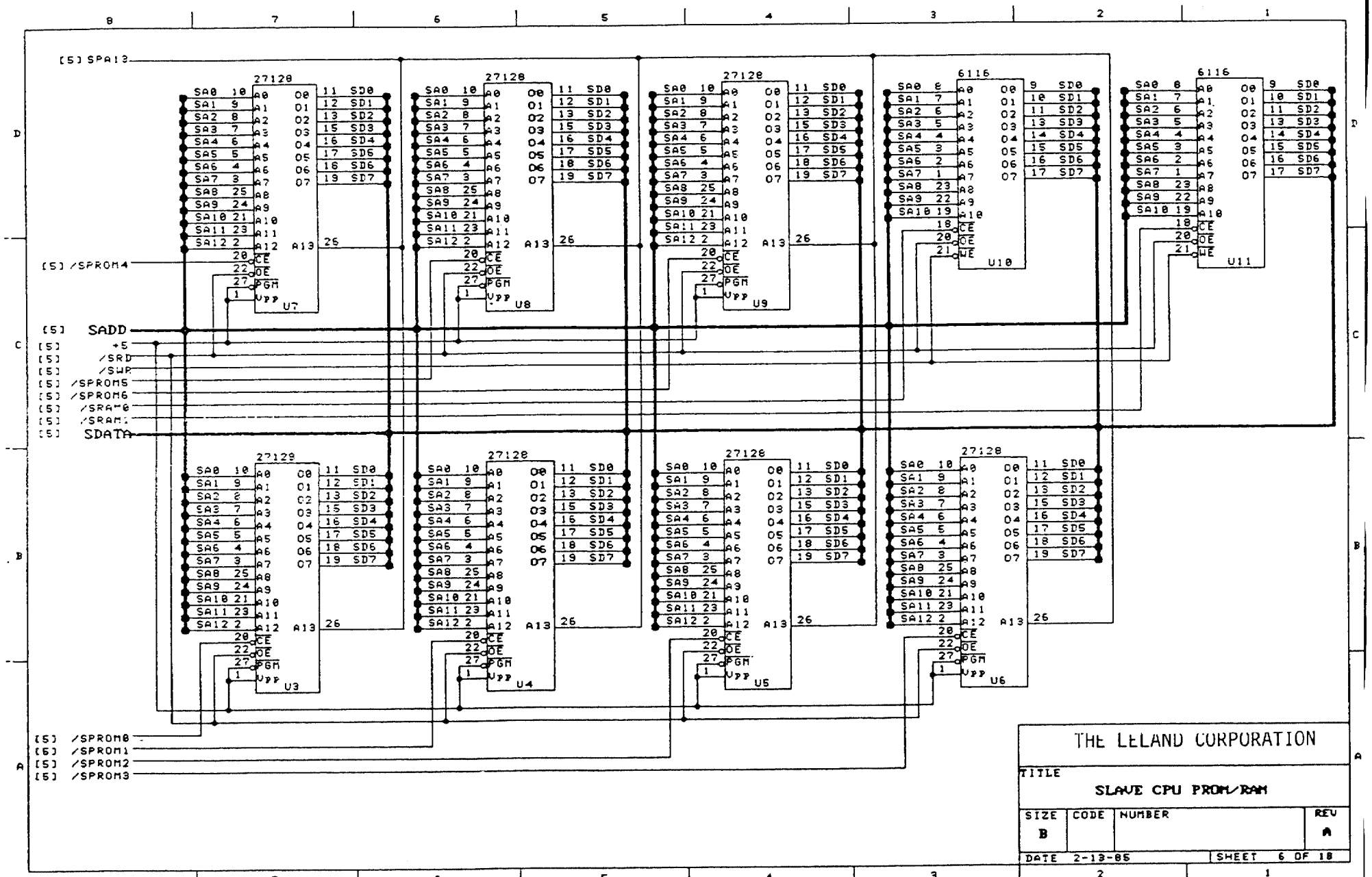
[5] SPA13
[5] /SPROM4
[5] SADD
[5] +5
[5] /SRD
[5] /SWR
[5] /SPROM5
[5] /SPROM6
[5] /SRAM0
[5] /SRAM1
[5] SDATA
[5] /SPROM0
[5] /SPROM1
[5] /SPROM2
[5] /SPROM3
27128
6116
U7
U8
U9
U10
U11
U3
U4
U5
U6
THE LELAND CORPORATION
TITLE
SLAVE CPU PROM/RAM
SIZE
B
CODE
NUMBER
REV
A
DATE 2-13-85
SHEET 6 OF 18

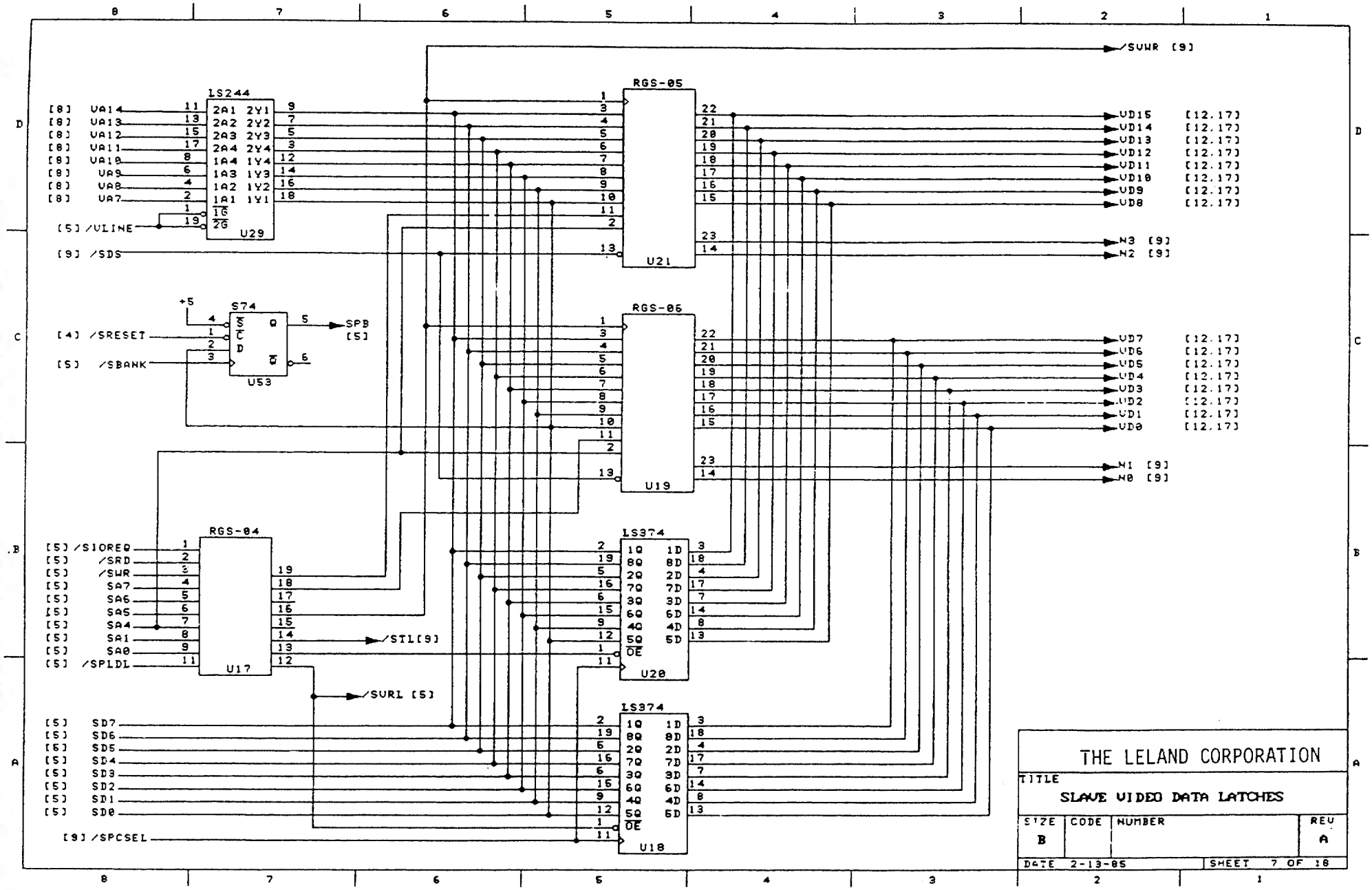

LS244
U29
RGS-05
U21
RGS-06
U19
S74
U53
RGS-04
U17
LS374
U20
LS374
U18
/SVWR [9]
VD15 [12,17]
VD14 [12,17]
VD13 [12,17]
VD12 [12,17]
VD11 [12,17]
VD10 [12,17]
VD9 [12,17]
VD8 [12,17]
N3 [9]
N2 [9]
VD7 [12,17]
VD6 [12,17]
VD5 [12,17]
VD4 [12,17]
VD3 [12,17]
VD2 [12,17]
VD1 [12,17]
VD0 [12,17]
N1 [9]
N0 [9]
[8] VA14
[8] VA13
[8] VA12
[8] VA11
[8] VA10
[8] VA9
[8] VA8
[8] VA7
[5] /VLINE
[9] /SDS
+5
[4] /SRESET
[5] /SBANK
SPB [5]
[5] /SIOREQ
[5] /SRD
[5] /SWR
[5] SA7
[5] SA6
[5] SA5
[5] SA4
[5] SA1
[5] SA0
[5] /SPLDL
/STL[9]
/SVRL [5]
[5] SD7
[5] SD6
[5] SD5
[5] SD4
[5] SD3
[5] SD2
[5] SD1
[5] SD0
[9] /SPCSEL
THE LELAND CORPORATION
TITLE
SLAVE VIDEO DATA LATCHES
SIZE B
CODE
NUMBER
REV A
DATE 2-13-85
SHEET 7 OF 18

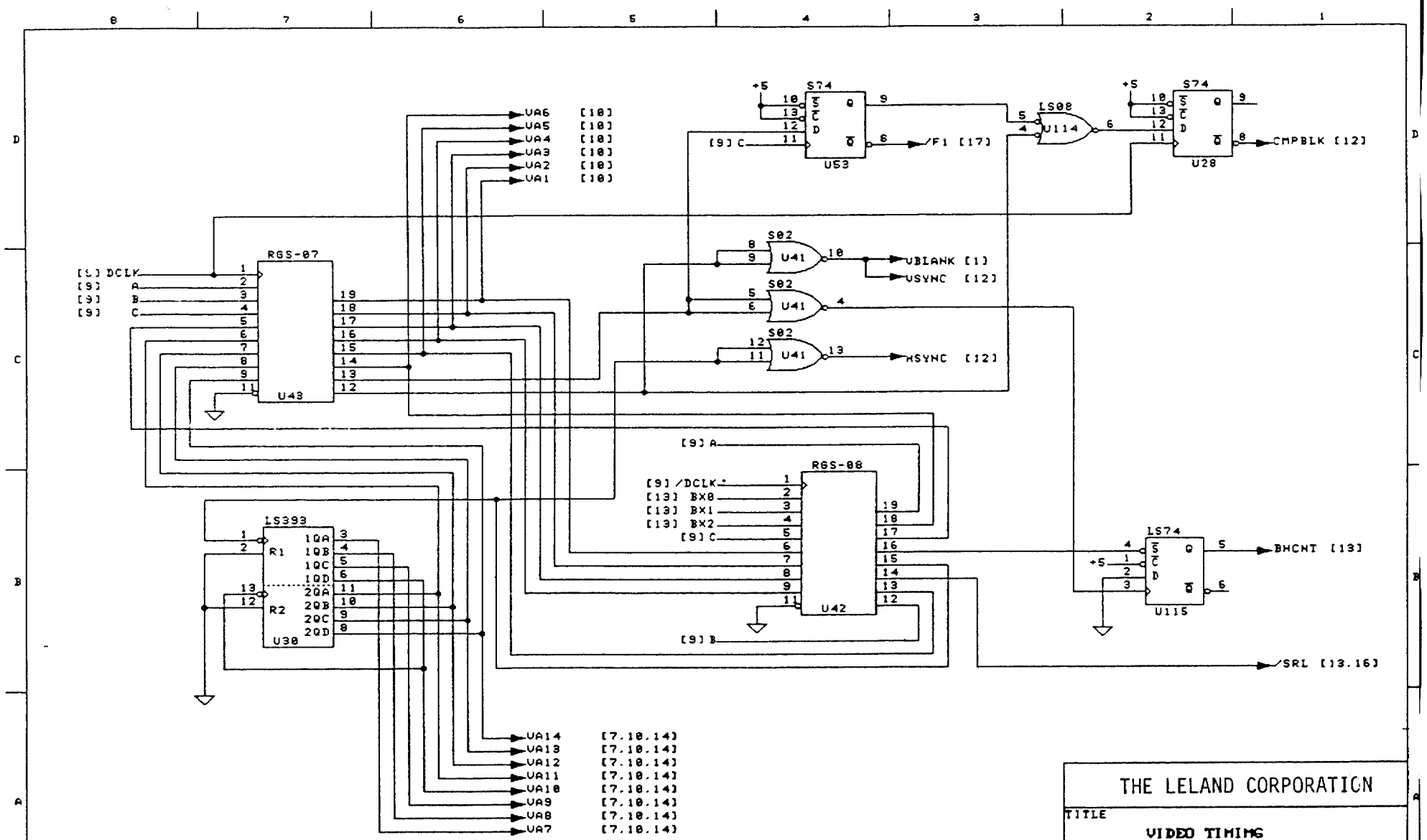

THE LELAND CORPORATION

TITLE: VIDEO TIMING

SIZE	CODE	NUMBER	REV
B			A

DATE 2-13-85 SHEET 8 OF 10

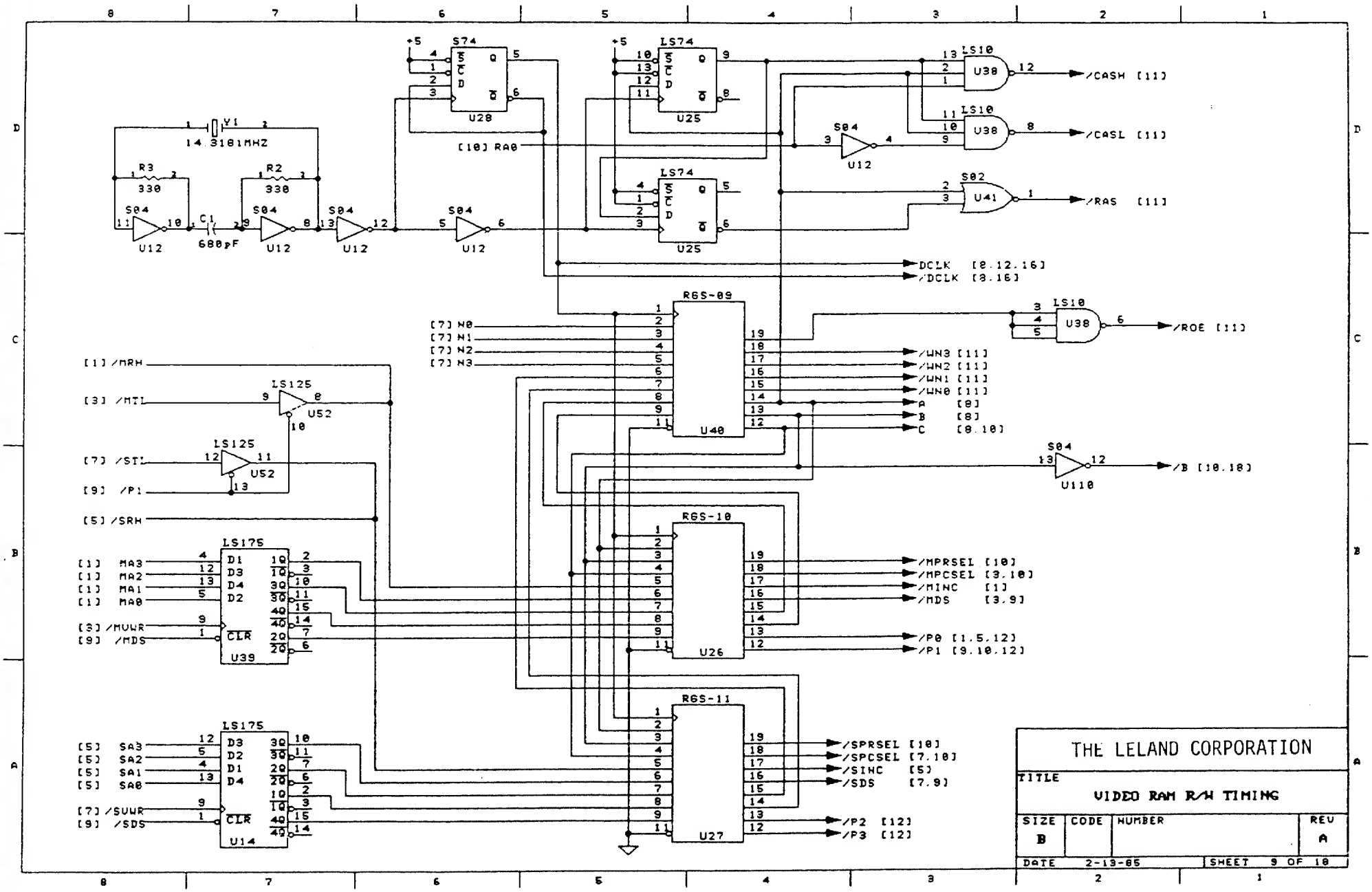
THE LELAND CORPORATION
TITLE
VIDEO RAM R/W TIMING
SIZE B
CODE
NUMBER
REV A
DATE 2-13-85
SHEET 9 OF 18
S74 U28
LS74 U25
LS10 U38
S04 U12
S02 U41
V1 14.3181MHZ
R3 330
R2 330
C1 680pF
[10] RA0
/CASH [11]
/CASL [11]
/RAS [11]
DCLK [8.12.16]
/DCLK [8.16]
RGS-09 U40
RGS-10 U26
RGS-11 U27
LS125 U52
LS175 U39
LS175 U14
[7] N0
[7] N1
[7] N2
[7] N3
[1] /MRH
[3] /MTL
[7] /STL
[9] /P1
[5] /SRH
[1] MA3
[1] MA2
[1] MA1
[1] MA0
[3] /MUWR
[9] /MDS
[5] SA3
[5] SA2
[5] SA1
[5] SA0
[7] /SUWR
[9] /SDS
/WN3 [11]
/WN2 [11]
/WN1 [11]
/WN0 [11]
A [8]
B [8]
C [8.10]
/ROE [11]
/B [10.18]
/MPRSEL [10]
/MPCSEL [3.10]
/MINC [1]
/MDS [3.9]
/P0 [1.5.12]
/P1 [9.10.12]
/SPRSEL [10]
/SPCSEL [7.10]
/SINC [5]
/SDS [7.9]
/P2 [12]
/P3 [12]

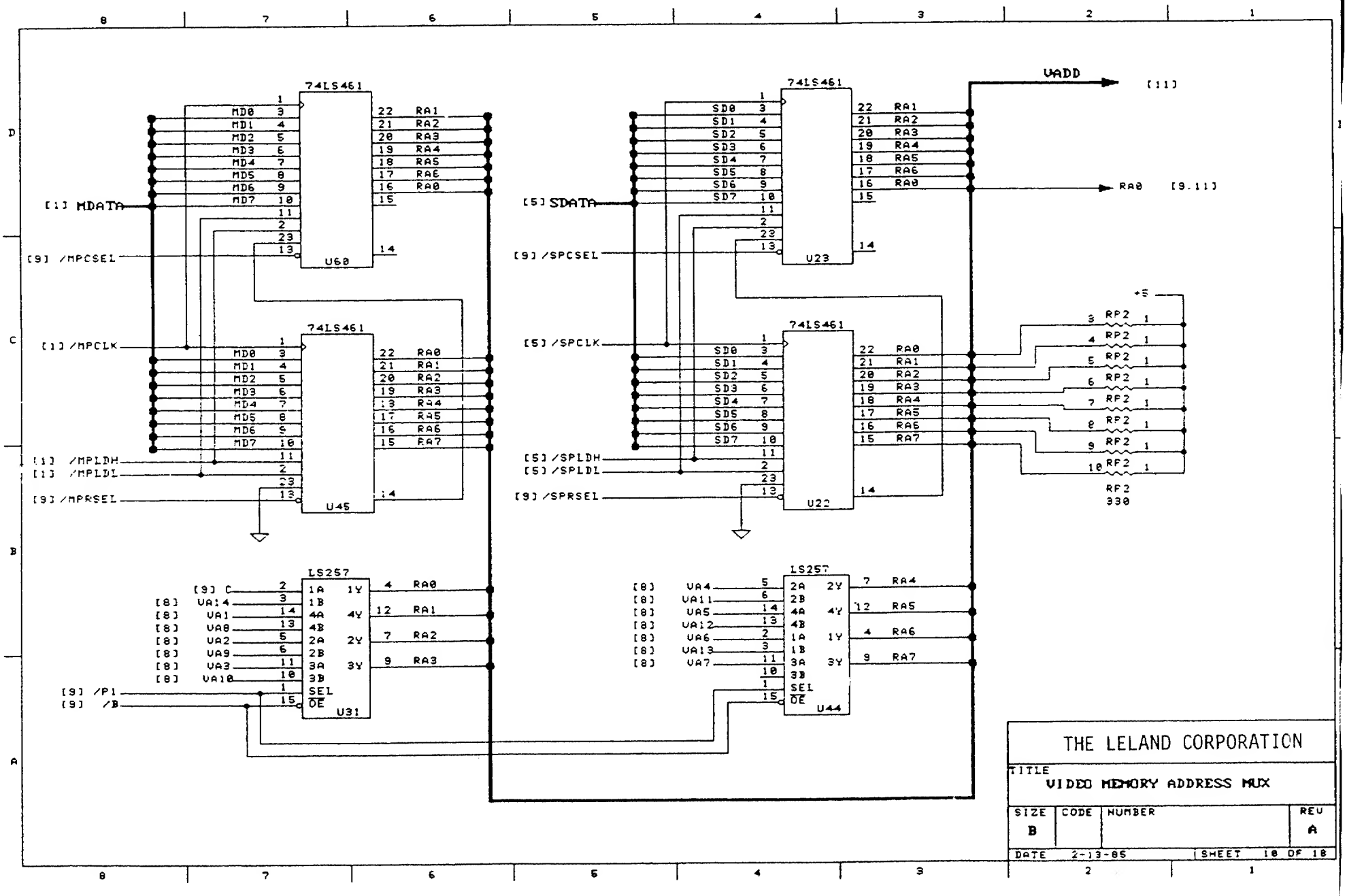
74LS461
U60
U45
U23
U22
MD0
MD1
MD2
MD3
MD4
MD5
MD6
MD7
SD0
SD1
SD2
SD3
SD4
SD5
SD6
SD7
RA0
RA1
RA2
RA3
RA4
RA5
RA6
RA7
[1] MDATA
[5] SDATA
[9] /MPCSEL
[9] /SPCSEL
[1] /MPCLK
[5] /SPCLK
[1] /MPLDH
[1] /MPLDL
[5] /SPLDH
[5] /SPLDL
[9] /MPRSEL
[9] /SPRSEL
VADD
[11]
[9.11]
+5
RP2
330
LS257
U31
U44
[9] C
[8] VA14
[8] VA1
[8] VA8
[8] VA2
[8] VA9
[8] VA3
[8] VA10
[9] /P1
[9] /B
[8] VA4
[8] VA11
[8] VA5
[8] VA12
[8] VA6
[8] VA13
[8] VA7
1A
1B
4A
4B
2A
2B
3A
3B
SEL
OE
1Y
4Y
2Y
3Y
THE LELAND CORPORATION
TITLE
VIDEO MEMORY ADDRESS MUX
SIZE
B
CODE
NUMBER
REV
A
DATE 2-13-85
SHEET 10 OF 18

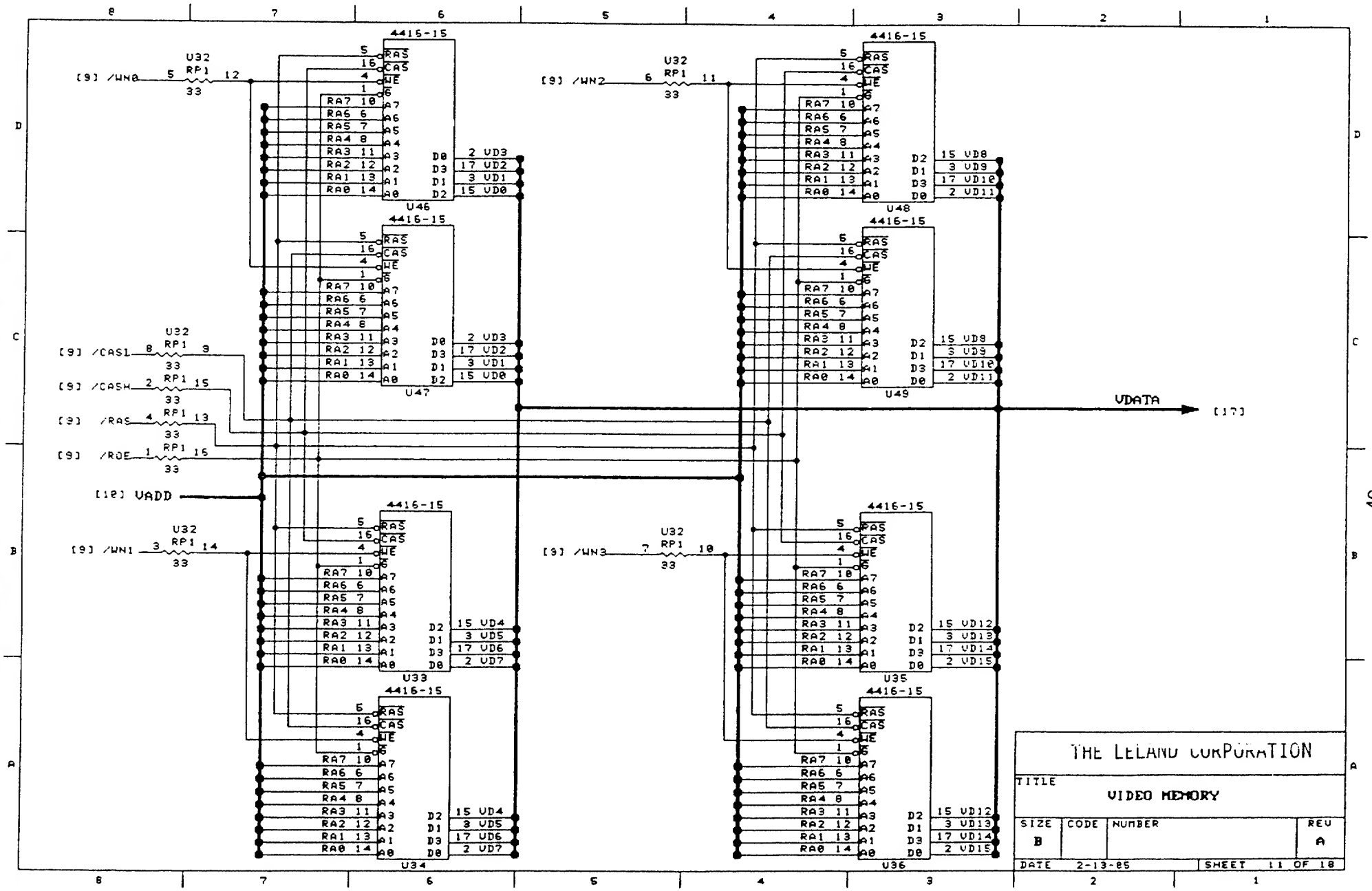

4416-15
U46
U47
U48
U49
U33
U34
U35
U36
U32
RP1
33
[9] /WN0
[9] /WN1
[9] /WN2
[9] /WN3
[9] /CASL
[9] /CASH
[9] /RAS
[9] /ROE
[10] VADD
VDATA
[17]
THE LELAND CORPORATION
TITLE
VIDEO MEMORY
SIZE
B
CODE
NUMBER
REV
A
DATE 2-13-85
SHEET 11 OF 18

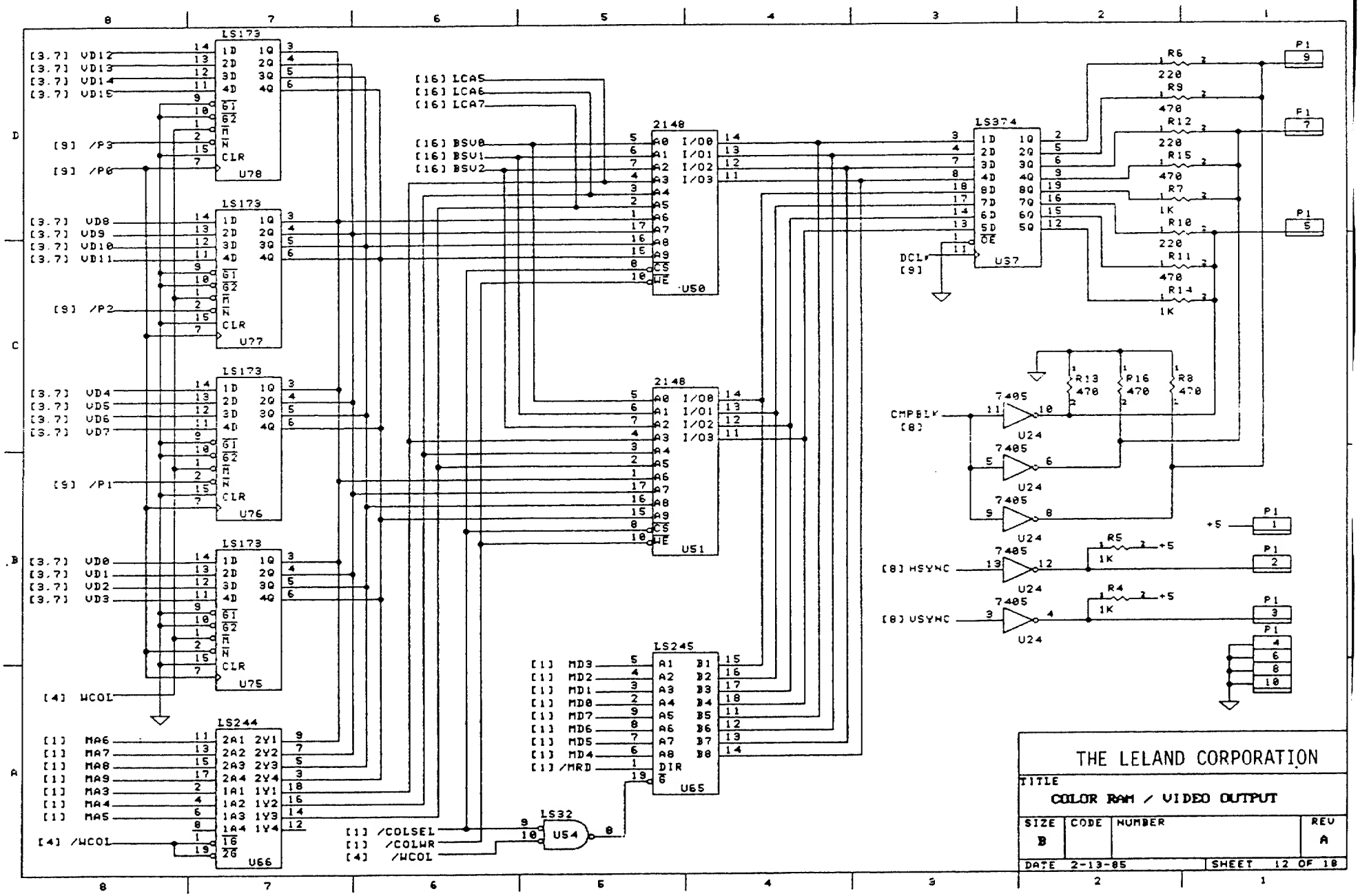
LS173
U78
U77
U76
U75
LS244
U66
2148
U50
U51
LS374
U37
LS245
U65
LS32
U54
7405
U24
[3.7] VD12
[3.7] VD13
[3.7] VD14
[3.7] VD15
[3.7] VD8
[3.7] VD9
[3.7] VD10
[3.7] VD11
[3.7] VD4
[3.7] VD5
[3.7] VD6
[3.7] VD7
[3.7] VD0
[3.7] VD1
[3.7] VD2
[3.7] VD3
[9] /P3
[9] /P0
[9] /P2
[9] /P1
[4] WCOL
[4] /WCOL
[16] LCA5
[16] LCA6
[16] LCA7
[16] BSV0
[16] BSV1
[16] BSV2
[1] MA6
[1] MA7
[1] MA8
[1] MA9
[1] MA3
[1] MA4
[1] MA5
[1] MD3
[1] MD2
[1] MD1
[1] MD0
[1] MD7
[1] MD6
[1] MD5
[1] MD4
[1] /MRD
[1] /COLSEL
[1] /COLWR
DCL
[9]
CMPBLK
[8]
[8] HSYNC
[8] VSYNC
R6 220
R9 470
R12 220
R15 470
R7 1K
R10 220
R11 470
R14 1K
R13 470
R16 470
R8 470
R5 1K
R4 1K
+5
P1
THE LELAND CORPORATION
TITLE
COLOR RAM / VIDEO OUTPUT
SIZE B
CODE
NUMBER
REV A
DATE 2-13-85
SHEET 12 OF 18

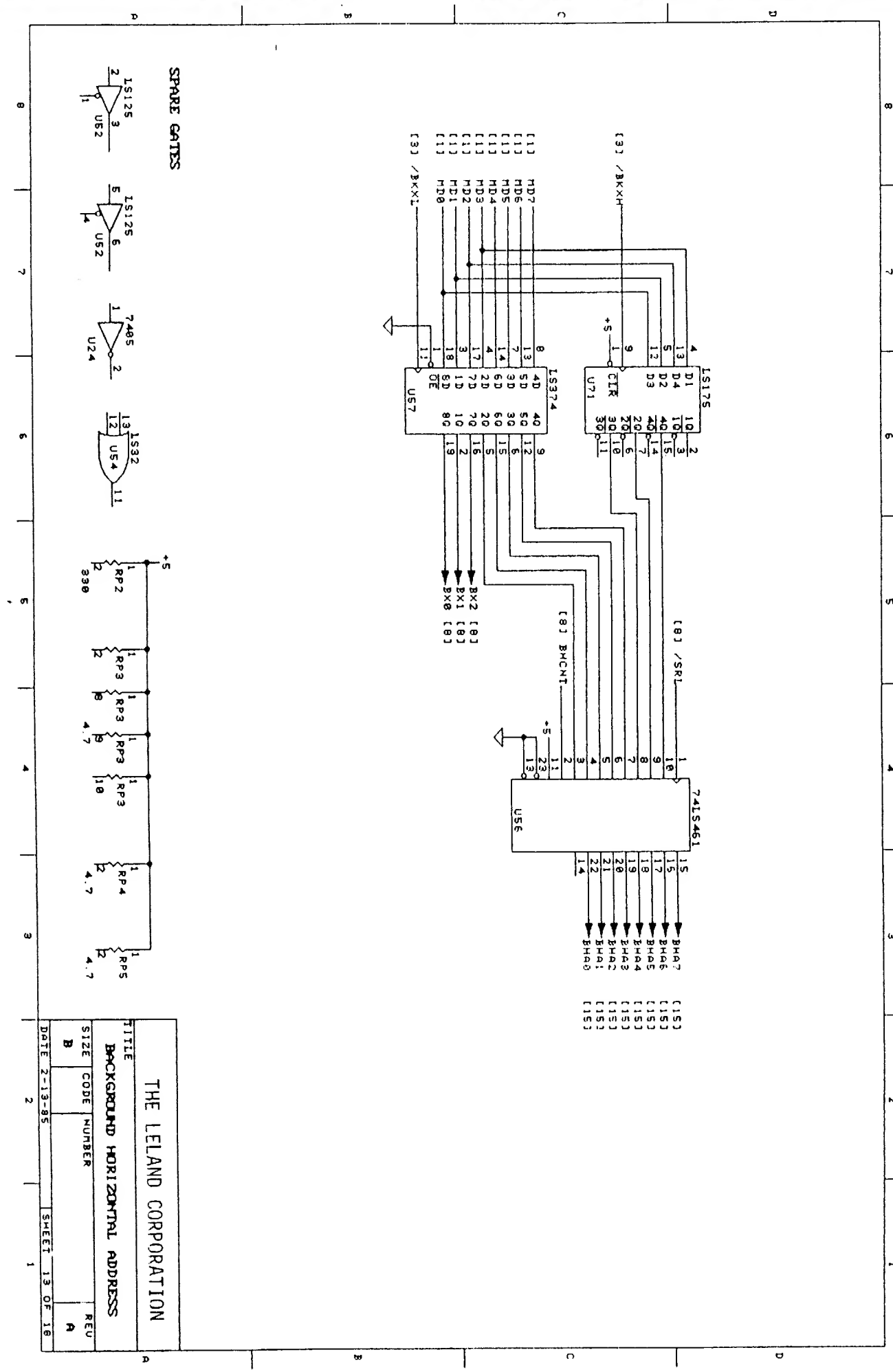
SPARE GATES
LS125
U52
LS125
U52
7405
U24
LS32
U54
RP2
330
RP3
RP3
4.7
RP3
RP3
RP4
4.7
RP5
4.7
+5
LS175
U71
CLR
LS374
U57
OE
74LS461
U56
[3] /BKXH
[3] /BKXL
MD7
MD6
MD5
MD4
MD3
MD2
MD1
MD0
BX2 [8]
BX1 [8]
BX0 [8]
[8] BMCNT
[8] /SRL
BHA7
BHA6
BHA5
BHA4
BHA3
BHA2
BHA1
BHA0
[15]
THE LELAND CORPORATION
TITLE
BACKGROUND HORIZONTAL ADDRESS
SIZE
B
CODE
NUMBER
REV
A
DATE 2-13-85
SHEET 13 OF 18

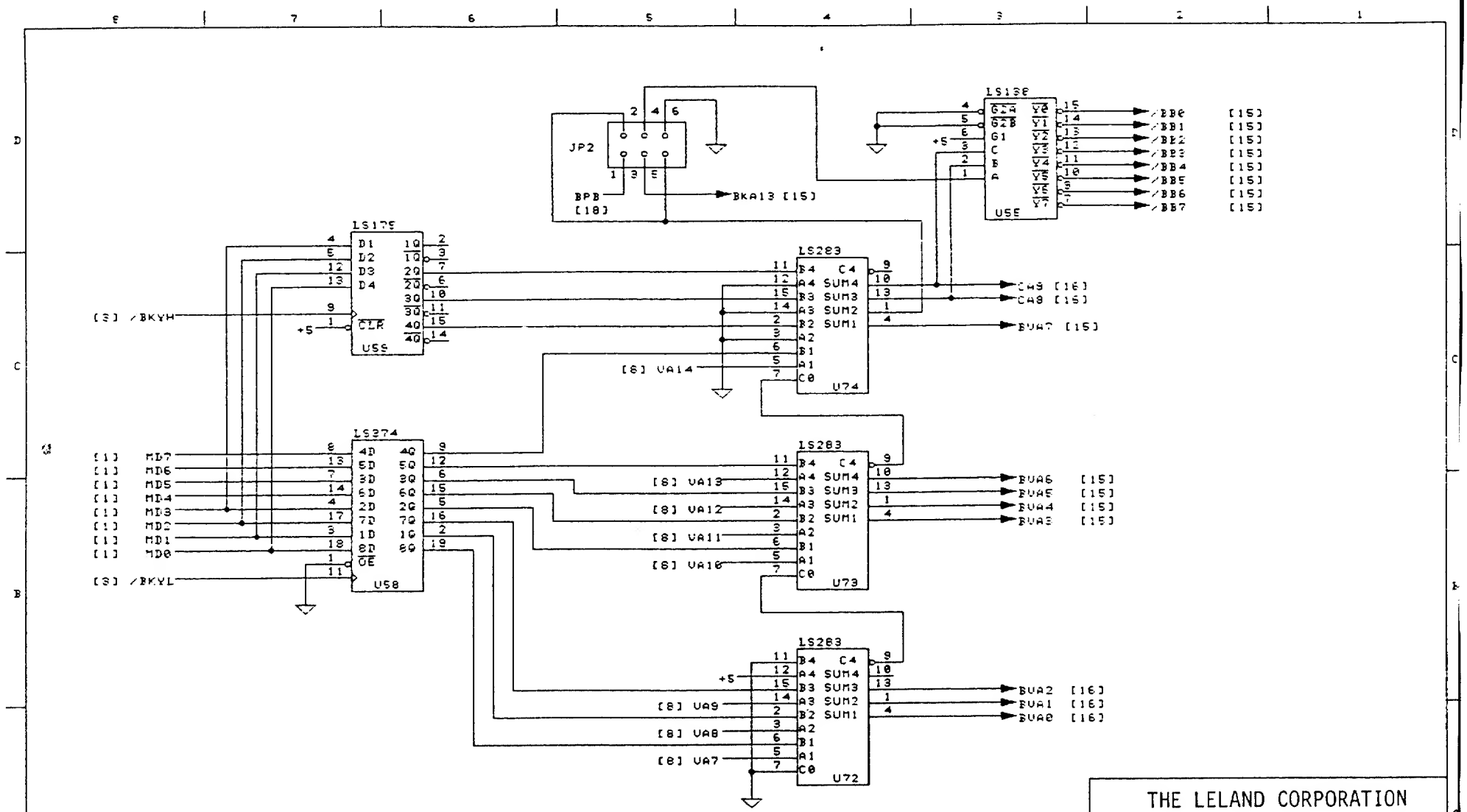
JP2
BPB [18]
BKA13 [15]
LS138
U55
/BB0 [15]
/BB1 [15]
/BB2 [15]
/BB3 [15]
/BB4 [15]
/BB5 [15]
/BB6 [15]
/BB7 [15]
LS175
U55
[8] /BKYH
LS283
U74
[8] VA14
CA9 [16]
CA8 [15]
BVA7 [15]
LS374
U58
[8] /BKYL
LS283
U73
[8] VA13
[8] VA12
[8] VA11
[8] VA10
BVA6 [15]
BVA5 [15]
BVA4 [15]
BVA3 [15]
LS283
U72
[8] VA9
[8] VA8
[8] VA7
BVA2 [16]
BVA1 [16]
BVA0 [16]
THE LELAND CORPORATION
TITLE
BACKGROUND VERTICAL ADDRESS
SIZE B
CODE
NUMBER
REV A
DATE 2-13-85
SHEET 14 OF 18

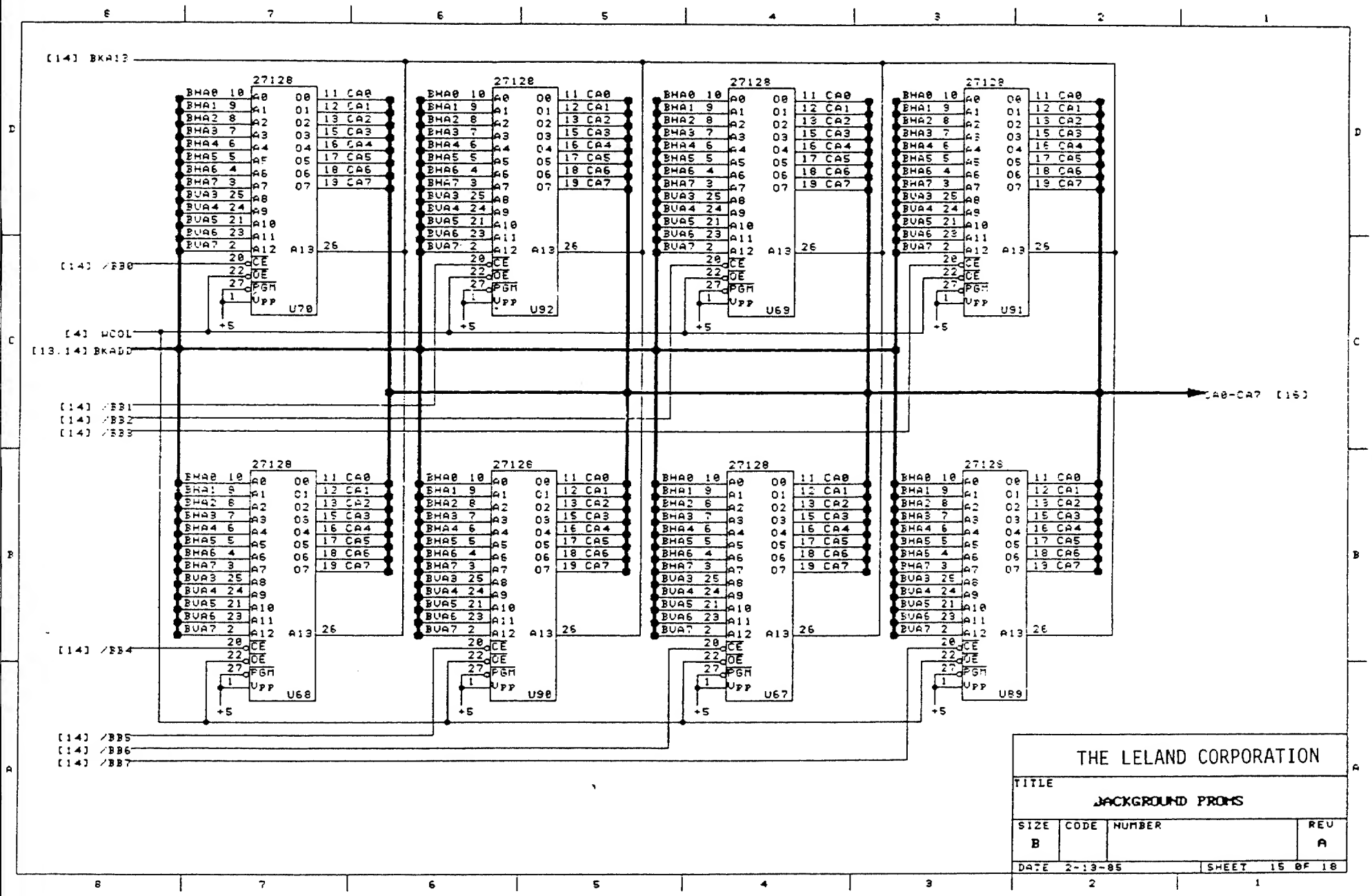
[14] BKA13
[14] /BB0
[4] WCOL
[13,14] BKADD
[14] /BB1
[14] /BB2
[14] /BB3
[14] /BB4
[14] /BB5
[14] /BB6
[14] /BB7
CA0-CA7 [16]
27128
U70
U92
U69
U91
U68
U90
U67
U89
THE LELAND CORPORATION
TITLE
BACKGROUND PROMS
SIZE
B
CODE
NUMBER
REV
A
DATE 2-13-85
SHEET 15 OF 18

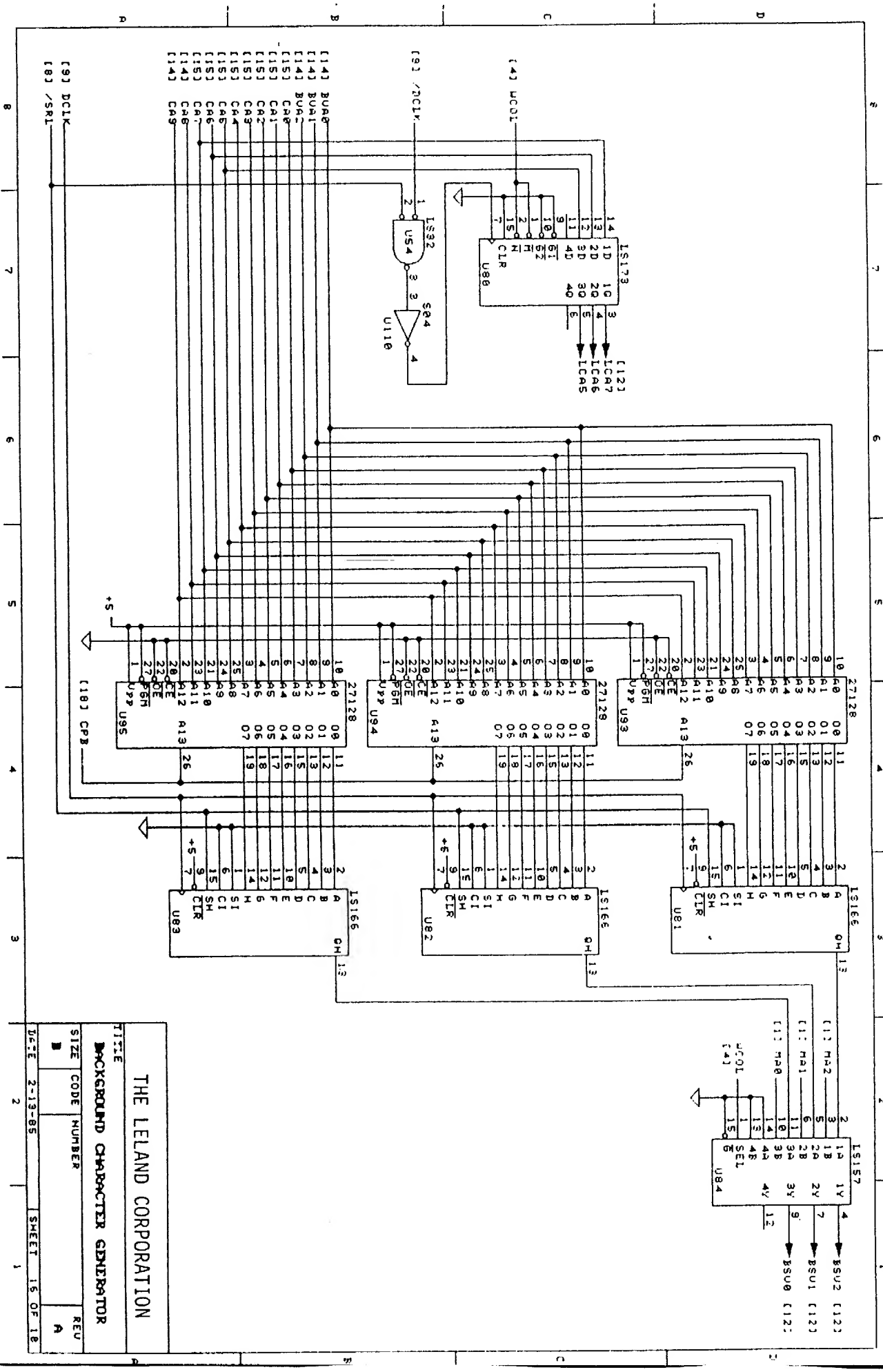
THE LELAND CORPORATION
TITLE
BACKGROUND CHARACTER GENERATOR
SIZE
B
CODE
NUMBER
REV
A
DATE 2-13-85
SHEET 15 OF 18

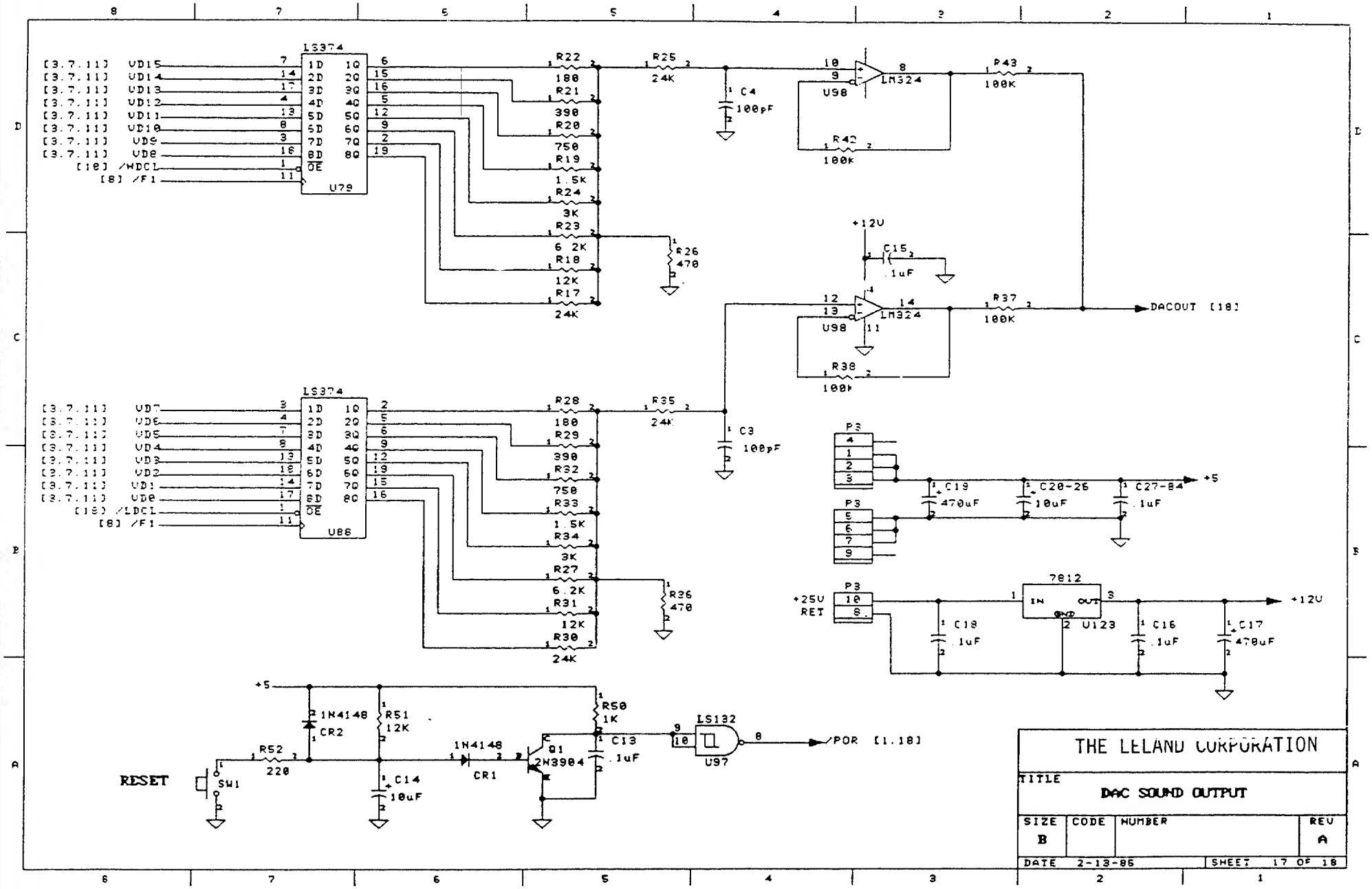
LS374
U79
[3.7.11] VD15
[3.7.11] VD14
[3.7.11] VD13
[3.7.11] VD12
[3.7.11] VD11
[3.7.11] VD10
[3.7.11] VD9
[3.7.11] VD8
[18] /WDCL
[8] /F1
R22 180
R21 390
R20 750
R19 1.5K
R24 3K
R23 6.2K
R18 12K
R17 24K
R25 24K
C4 100pF
R26 470
U98 LM324
R43 100K
R42 100K
+12V
C15 .1uF
R37 100K
DACOUT [18]
R38 100K
LS374
U88
[3.7.11] VD7
[3.7.11] VD6
[3.7.11] VD5
[3.7.11] VD4
[3.7.11] VD3
[3.7.11] VD2
[3.7.11] VD1
[3.7.11] VD0
[18] /LDCL
[8] /F1
R28 180
R29 390
R32 750
R33 1.5K
R34 3K
R27 6.2K
R31 12K
R30 24K
R35 24K
C3 100pF
R36 470
P3
C19 470uF
C20-26 10uF
C27-84 .1uF
+5
+25V RET
7812
U123
C18 .1uF
C16 .1uF
C17 470uF
+12V
+5
1N4148 CR2
R51 12K
R52 220
RESET
SW1
C14 10uF
1N4148 CR1
Q1 2N3904
R50 1K
C13 .1uF
LS132
U97
/POR [1.18]
THE LELAND CORPORATION
TITLE
DAC SOUND OUTPUT
SIZE B
CODE
NUMBER
REV A
DATE 2-13-86
SHEET 17 OF 18

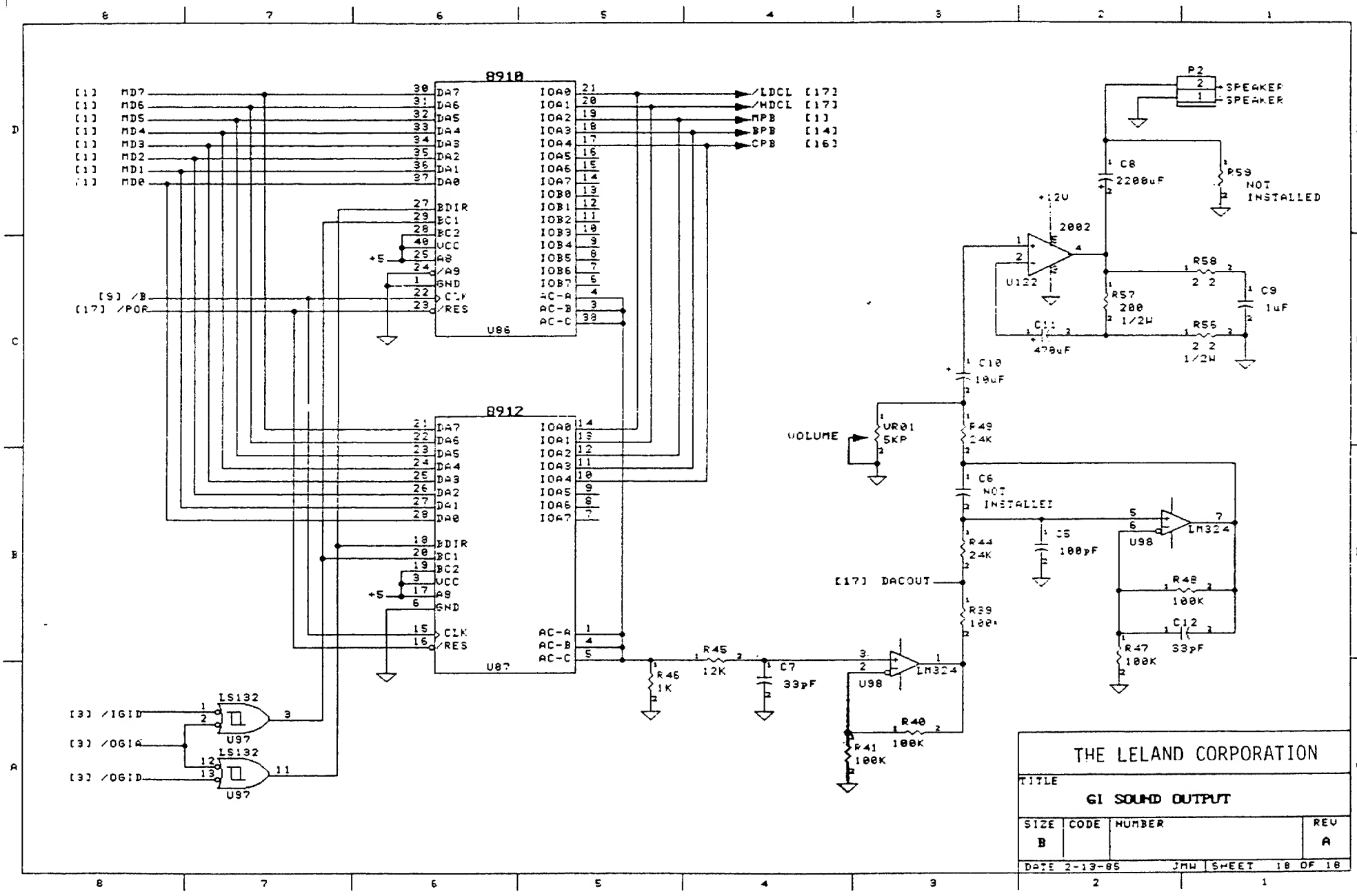
8910
8912
U86
U87
MD7
MD6
MD5
MD4
MD3
MD2
MD1
MD0
/B
/POR
/LDCL [17]
/MDCL [17]
MPB [1]
BPB [14]
CPB [16]
LS132
U97
/IGID
/OGIA
/OGID
P2
SPEAKER
SPEAKER
C8 2200uF
PS9 NOT INSTALLED
+12V
2002
U122
R58 2.2
R57 200 1/2W
R55 2.2 1/2W
C9 1uF
C11 470uF
C10 10uF
VOLUME
VR01 5KP
R49 24K
C6 NOT INSTALLED
C5 100pF
U98
LM324
R44 24K
R48 100K
C12 33pF
R47 100K
[17] DACOUT
R39 100K
R45 12K
C7 33pF
R46 1K
R40 100K
R41 100K
THE LELAND CORPORATION
TITLE
G1 SOUND OUTPUT
SIZE B
CODE
NUMBER
REV A
DATE 2-13-85
JMW
SHEET 18 OF 18

K7000 COLOR MONITOR SCHEMATIC DIAGRAM

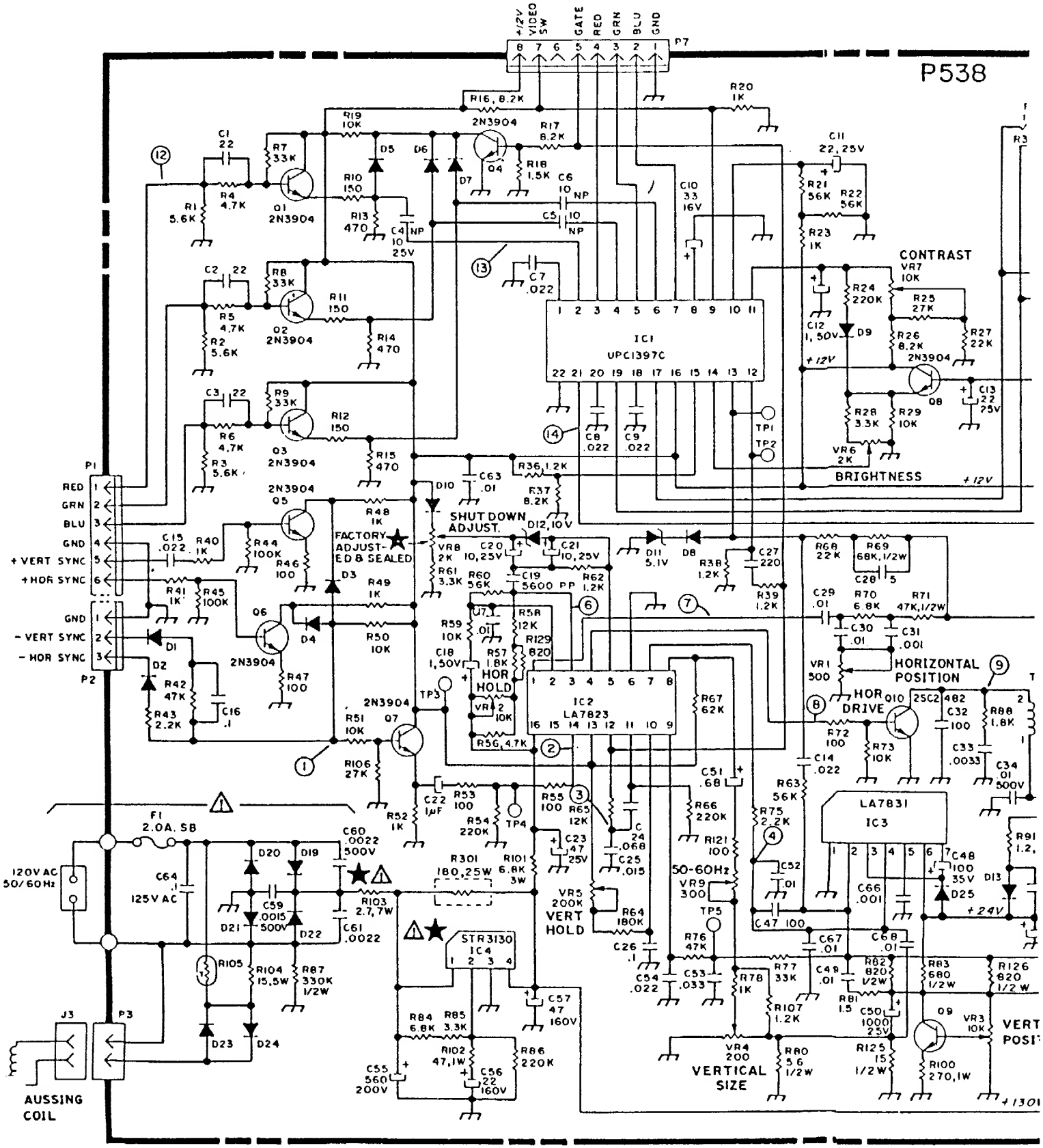

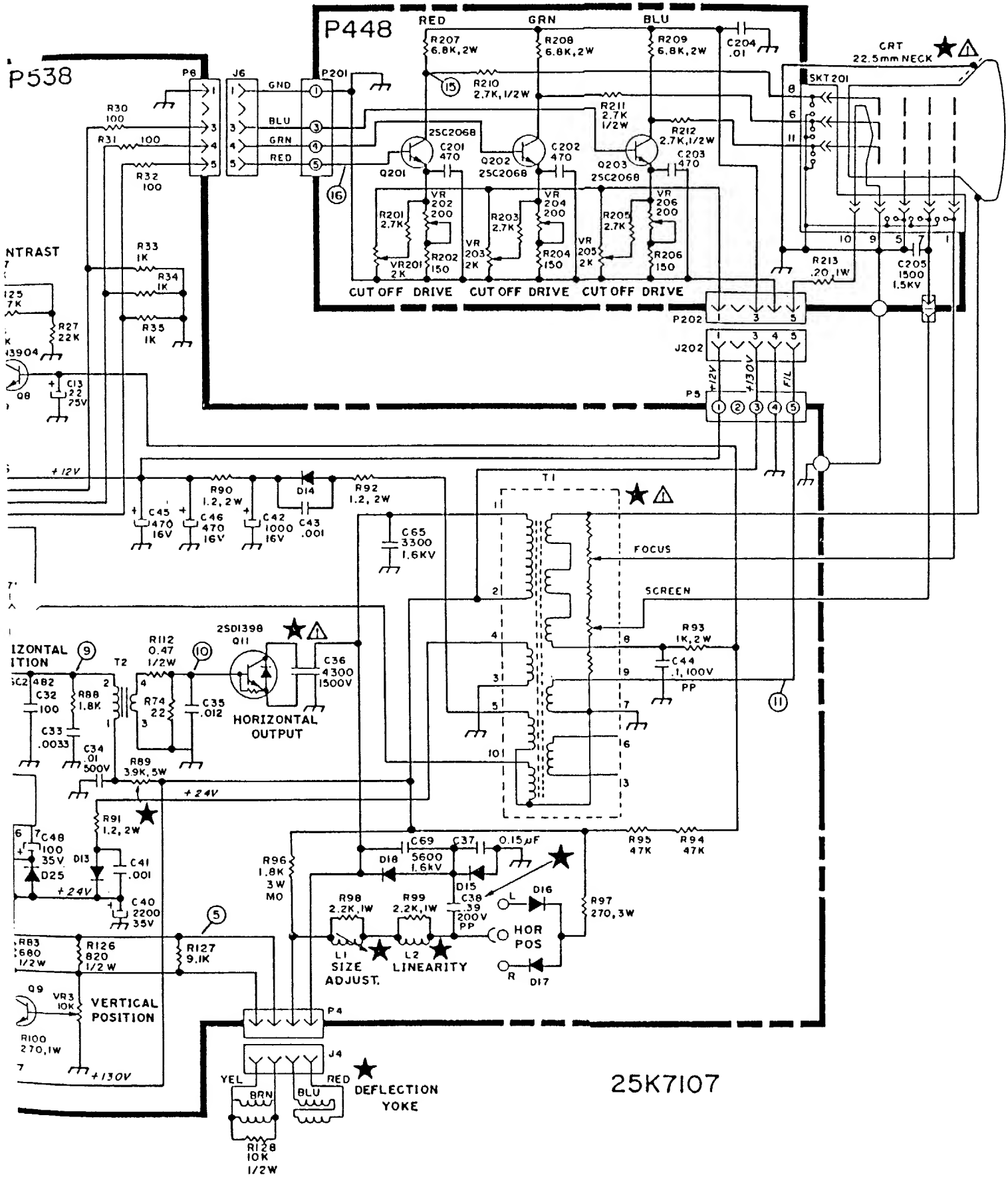
P538
P448
RED
GRN
BLU
CRT
22.5mm NECK
SKT201
P6
J6
P201
GND
BLU
GRN
RED
R30
100
R31
100
R32
100
R33
1K
R34
1K
R35
1K
R27
22K
Q8
C13
22
25V
NTRAST
R207
6.8K,2W
R208
6.8K,2W
R209
6.8K,2W
C204
.01
R210
2.7K,1/2W
R211
2.7K
1/2W
R212
2.7K,1/2W
C203
470
2SC2068
C201
470
Q201
Q202
2SC2068
C202
470
Q203
2SC2068
VR
202
200
VR
204
200
VR
206
200
R201
2.7K
R203
2.7K
R205
2.7K
VR201
2K
R202
150
VR
203
2K
R204
150
VR
205
2K
R206
150
CUT OFF
DRIVE
CUT OFF
DRIVE
CUT OFF
DRIVE
R213
.20 1W
C205
1500
1.5KV
P202
J202
P5
+12V
+130V
F/L
+12V
C45
470
16V
C46
470
16V
C42
1000
16V
C43
.001
D14
R90
1.2, 2W
R92
1.2, 2W
C65
3300
1.6KV
T1
FOCUS
SCREEN
R93
1K,2W
C44
.1, 100V
PP
2SD1398
Q11
R112
0.47
1/2W
C36
4300
1500V
HORIZONTAL
OUTPUT
T2
C32
100
R88
1.8K
C33
.0033
C34
.01
500V
R74
22
C35
.012
R89
3.9K,5W
+24V
R91
1.2, 2W
C48
100
35V
D13
D25
C41
.001
C40
2200
35V
+24V
R96
1.8K
3W
MO
C69
5600
1.6KV
C37
0.15μF
D18
D15
C38
39
200V
PP
R98
2.2K,1W
R99
2.2K,1W
L1
SIZE
ADJUST.
L2
LINEARITY
D16
HOR
POS
D17
R97
270,3W
R95
47K
R94
47K
R83
680
1/2W
R126
820
1/2W
R127
9.1K
Q9
VR3
10K
VERTICAL
POSITION
R100
270,1W
+130V
P4
J4
YEL
BRN
BLU
RED
DEFLECTION
YOKE
R128
10K
1/2W
25K7107